SN74LVC1G17 Single Schmitt-Trigger Buffer

1 Features

- Available in Ultra Small 0.64-mm^2 Package (DPW) With 0.5-mm Pitch
- Supports 5-V V_{CC} Operation
- Inputs Accept Voltages to 5.5 V
- Max t_{pd} of 4.6 ns at 3.3 V
- Low Power Consumption, 10-µA Max I_{CC}
- ±24-mA Output Drive at 3.3 V
- I_{off} Supports Live Insertion, Partial-Power-Down Mode, and Back-Drive Protection
- Latch-Up Performance Exceeds 100 mA Per JESD 78, Class II
- ESD Protection Exceeds JESD 22
  - 2000-V Human-Body Model (A114-A)
  - 200-V Machine Model (A115-A)
  - 1000-V Charged-Device Model (C101)

2 Applications

- AV Receiver
- Audio Dock: Portable
- Blu-ray Player and Home Theater
- MP3 Player/Recorder
- Personal Digital Assistant (PDA)
- Power: Telecom/Server AC/DC Supply: Single Controller: Analog and Digital
- Solid State Drive (SSD): Client and Enterprise
- TV: LCD/Digital and High-Definition (HDTV)
- Tablet: Enterprise
- Video Analytics: Server
- Wireless Headset, Keyboard, and Mouse

3 Description

This single Schmitt-trigger buffer is designed for 1.65-V to 5.5-V V_{CC} operation.

The SN74LVC1G17 device contains one buffer and performs the Boolean function Y = A.

The CMOS device has high output drive while maintaining low static power dissipation over a broad Vcc operating range.

The SN74LVC1G17 is available in a variety of packages, including the ultra-small DPW package with a body size of 0.8 mm × 0.8mm.

Device Information(1)

DEVICE NAME	PACKAGE	BODY SIZE
SN74LVC1G17	SOT-23 (5)	2.9mm × 1.6mm
	SC70 (5)	2.0mm × 1.25mm
	X2SON (4)	0.8mm × 0.8mm
	SON (6)	1.45mm × 1.0mm
	SON (6)	1.0mm × 1.0mm

(1) For all available packages, see the orderable addendum at the end of the datasheet.

4 Simplified Schematic

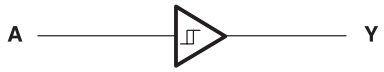

An IMPORTANT NOTICE at the end of this data sheet addresses availability, warranty, changes, use in safety-critical applications, intellectual property matters and other important disclaimers. PRODUCTION DATA.

Table of Contents

1 **Features** ... 1
2 **Applications** ... 1
3 **Description** ... 1
4 **Simplified Schematic** ... 1
5 **Revision History** ... 2
6 **Pin Configuration and Functions** ... 3
7 **Specifications** ... 4
7.1 Absolute Maximum Ratings ... 4
7.2 Handling Ratings ... 4
7.3 Recommended Operating Conditions ... 5
7.4 Thermal Information ... 5
7.5 Electrical Characteristics—DC Limit Changes ... 6
7.6 Switching Characteristics, C_L = 15 pF ... 7
7.7 Switching Characteristics AC Limit, –40°C TO 85°C 7
7.8 Switching Characteristics AC Limit, –40°C TO 125°C ... 7
7.9 Operating Characteristics ... 7
7.10 Typical Characteristics ... 7
8 **Parameter Measurement Information** ... 8
9 **Detailed Description** ... 10
9.1 Overview ... 10
9.2 Functional Block Diagram ... 10
9.3 Feature Description ... 10
9.4 Device Functional Modes ... 10
10 **Applications and Implementation** ... 11
10.1 Application Information ... 11
10.2 Typical Application ... 11
11 **Power Supply Recommendations** ... 12
12 **Layout** ... 12
12.1 Layout Guidelines ... 12
12.2 Layout Example ... 12
13 **Device and Documentation Support** ... 13
13.1 Trademarks ... 13
13.2 Electrostatic Discharge Caution ... 13
13.3 Glossary ... 13
14 **Mechanical, Packaging, and Orderable Information** ... 13

5 Revision History

Changes from Revision U (February 2014) to Revision V	Page
• Added Pin Functions table.	3
• Added Handling Ratings table.	4
• Added Thermal Information table.	5
• Added Typical Characteristics.	7
• Added Detailed Description section.	10
• Added Application and Implementation section.	11
• Added Power Supply Recommendations section.	12
• Added Layout section.	12

Changes from Revision T (November 2012) to Revision U	Page
• Added Applications.	1
• Moved T_{stg} to Handling Ratings table.	4
• Changed MAX operating free-air temperature from 85°C to 125°C.	5
• Added –40°C to 125°C to Electrical Characteristics table.	6
• Added Switching Characteristics table for –40°C to 125°C temperature range.	7

Changes from Revision S (June 2011) to Revision T	Page
• Removed Ordering Information table.	3

Copyright © 2001–2014, Texas Instruments Incorporated

6 Pin Configuration and Functions

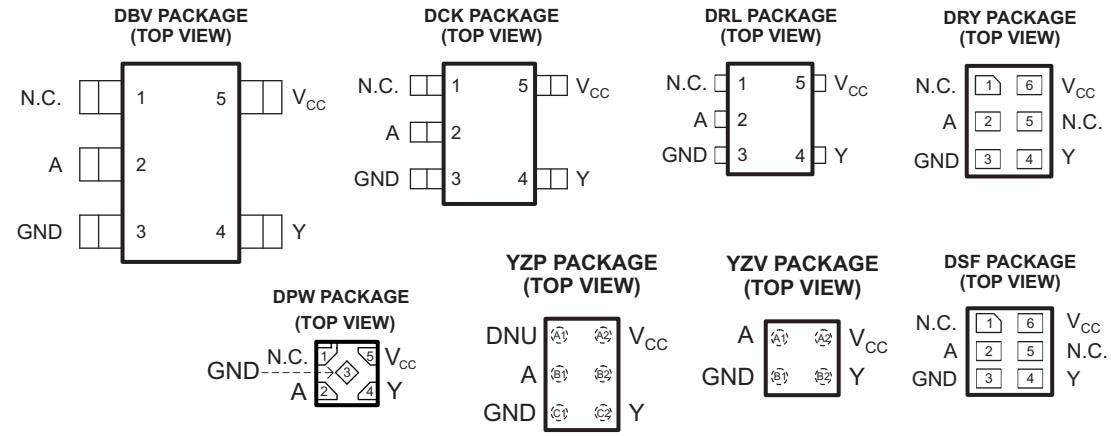

N.C. – No internal connection
See mechanical drawings for dimensions.
DNU – Do not use

Pin Functions

PIN					DESCRIPTION
NAME	DBV, DCK, DRL, DPW	DRY, DSF	YZP	YZV	
NC	1	1, 5	A1, B2	–	Not connected
A	2	2	B1	A1	Input
GND	3	3	C1	B1	Ground
Y	4	4	C2	B2	Output
V_{CC}	5	6	A2	A2	Power terminal

7 Specifications

7.1 Absolute Maximum Ratings[1]

over operating free-air temperature range (unless otherwise noted)

			MIN	MAX	UNIT
V_{CC}	Supply voltage range		–0.5	6.5	V
V_I	Input voltage range[2]		–0.5	6.5	V
V_O	Voltage range applied to any output in the high-impedance or power-off state[2]		–0.5	6.5	V
V_O	Voltage range applied to any output in the high or low state[2][3]		–0.5	V_{CC} + 0.5	V
I_{IK}	Input clamp current	$V_I < 0$		–50	mA
I_{OK}	Output clamp current	$V_O < 0$		–50	mA
I_O	Continuous output current			±50	mA
	Continuous current through V_{CC} or GND			±100	mA

(1) Stresses beyond those listed under *Absolute Maximum Ratings* may cause permanent damage to the device. These are stress ratings only, and functional operation of the device at these or any other conditions beyond those indicated under Recommended Operating Conditions tables is not implied. Exposure to absolute-maximum-rated conditions for extended periods may affect device reliability.
(2) The input and output negative-voltage ratings may be exceeded if the input and output current ratings are observed.
(3) The value of V_{CC} is provided in the *Recommended Operating Conditions* table.

7.2 Handling Ratings

		MIN	MAX	UNIT
T_{stg}	Storage temperature range	–65	150	°C
V_{ESD} [1]	Human-Body Model (HBM)[2]	0	2	kV
	Charged-Device Model (CDM)[3]	0	1	kV

(1) Electrostatic discharge (ESD) to measure device sensitivity and immunity to damage caused by assembly line electrostatic discharges in to the device.
(2) Level listed above is the passing level per ANSI, ESDA, and JEDEC JS-001. JEDEC document JEP155 states that 500-V HBM allows safe manufacturing with a standard ESD control process.
(3) Level listed above is the passing level per EIA-JEDEC JESD22-C101. JEDEC document JEP157 states that 250-V CDM allows safe manufacturing with a standard ESD control process.

Copyright © 2001–2014, Texas Instruments Incorporated

7.3 Recommended Operating Conditions[(1)]

			MIN	MAX	UNIT
V_{CC}	Supply voltage	Operating	1.65	5.5	V
		Data retention only	1.5		
V_I	Input voltage		0	5.5	V
V_O	Output voltage		0	V_{CC}	V
I_{OH}	High-level output current	V_{CC} = 1.65 V		–4	mA
		V_{CC} = 2.3 V		–8	
		V_{CC} = 3 V		–16	
				–24	
		V_{CC} = 4.5 V		–32	
I_{OL}	Low-level output current	V_{CC} = 1.65 V		4	mA
		V_{CC} = 2.3 V		8	
		V_{CC} = 3 V		16	
				24	
		V_{CC} = 4.5 V		32	
T_A	Operating free-air temperature		–40	125	°C

(1) All unused inputs of the device must be held at V_{CC} or GND to ensure proper device operation. Refer to the TI application report, *Implications of Slow or Floating CMOS Inputs*, literature number SCBA004.

7.4 Thermal Information

THERMAL METRIC[(1)]		SN74LVC1G17							UNIT
		DBV	DCK	DRL	DRY	YZP	DPW	YZV	
		5 PINS	5 PINS	5 PINS	6 PINS	5 PINS	4 PINS	4 PINS	
$R_{\theta JA}$	Junction-to-ambient thermal resistance	229	280	350	608	130	340	181	°C/W
$R_{\theta JC(top)}$	Junction-to-case (top) thermal resistance	164	66	121	432	54	215	1	
$R_{\theta JB}$	Junction-to-board thermal resistance	62	67	171	446	51	294	39	
ψ_{JT}	Junction-to-top characterization parameter	44	2	11	191	1	41	8	
ψ_{JB}	Junction-to-board characterization parameter	62	66	169	442	50	294	38	
$R_{\theta JC(bot)}$	Junction-to-case (bottom) thermal resistance	–	–	–	198	–	250	–	

(1) For more information about traditional and new thermal metrics, see the *IC Package Thermal Metrics* application report, SPRA953.

Copyright © 2001–2014, Texas Instruments Incorporated

7.5 Electrical Characteristics—DC Limit Changes

over recommended operating free-air temperature range (unless otherwise noted)

PARAMETER	TEST CONDITIONS	V_{CC}	25°C			–40°C TO 85°C			–40°C TO 125°C			UNIT
			MIN	TYP(1)	MAX	MIN	TYP(1)	MAX	MIN	TYP	MAX	
V_{T+} (Positive-going input threshold voltage)		1.65 V				0.76		1.13	0.76		1.13	V
		2.3 V				1.08		1.56	1.08		1.56	
		3 V				1.48		1.92	1.48		1.92	
		4.5 V				2.19		2.74	2.19		2.74	
		5.5 V				2.65		3.33	2.65		3.33	
V_{T-} (Negative-going input threshold voltage)		1.65 V				0.35		0.59	0.35		0.59	V
		2.3 V				0.56		0.88	0.56		0.88	
		3 V				0.89		1.2	0.89		1.2	
		4.5 V				1.51		1.97	1.51		1.97	
		5.5 V				1.88		2.4	1.88		2.4	
ΔV_T Hysteresis ($V_{T+} - V_{T-}$)		1.65 V				0.36		0.64	0.36		0.64	V
		2.3 V				0.45		0.78	0.45		0.78	
		3 V				0.51		0.83	0.51		0.83	
		4.5 V				0.58		0.93	0.58		0.93	
		5.5 V				0.69		1.04	0.69		1.04	
V_{OH}	I_{OH} = –100 µA	1.65 V to 5.5 V				V_{CC} – 0.1			V_{CC} – 0.1			V
	I_{OH} = –4 mA	1.65 V				1.2			1.2			
	I_{OH} = –8 mA	2.3 V				1.9			1.9			
	I_{OH} = –16 mA	3 V				2.4			2.4			
	I_{OH} = –24 mA					2.3			2.3			
	I_{OH} = –32 mA	4.5 V				3.8			3.8			
V_{OL}	I_{OL} = 100 µA	1.65 V to 5.5 V						0.1			0.1	V
	I_{OL} = 4 mA	1.65 V						0.45			0.45	
	I_{OL} = 8 mA	2.3 V						0.3			0.3	
	I_{OL} = 16 mA	3 V						0.4			0.4	
	I_{OL} = 24 mA							0.55			0.55	
	I_{OL} = 32 mA	4.5 V						0.55			0.55	
I_I A input	V_I = 5.5 V or GND	0 to 5.5 V						±5			±5	µA
I_{off}	V_I or V_O = 5.5 V	0						±10			±10	µA
I_{CC}	V_I = 5.5 V or GND, I_O = 0	1.65 V to 5.5 V						10			10	µA
	V_I = 3.6 V or GND, I_O = 0	3 V to 3.6 V		0.5	1.5							
ΔI_{CC}	One input at V_{CC} – 0.6 V, Other inputs at V_{CC} or GND	3 V to 5.5 V						500			500	µA
C_I	V_I = V_{CC} or GND	3.3 V		4.5								pF

(1) All typical values are at V_{CC} = 3.3 V, T_A = 25°C.

Copyright © 2001–2014, Texas Instruments Incorporated

7.6 Switching Characteristics, C_L = 15 pF

over recommended operating free-air temperature range, C_L = 15 pF (unless otherwise noted) (see Figure 3)

PARAMETER	FROM (INPUT)	TO (OUTPUT)	–40°C TO 85°C								UNIT
			V_{CC} = 1.8 V ± 0.15 V		V_{CC} = 2.5 V ± 0.2 V		V_{CC} = 3.3 V ± 0.3 V		V_{CC} = 5 V ± 0.5 V		
			MIN	MAX	MIN	MAX	MIN	MAX	MIN	MAX	
t_{pd}	A	Y	2.8	9.9	1.6	5.5	1.5	4.6	0.9	4.4	ns

7.7 Switching Characteristics AC Limit, –40°C TO 85°C

over recommended operating free-air temperature range, C_L = 30 pF or 50 pF (unless otherwise noted) (see Figure 4)

PARAMETER	FROM (INPUT)	TO (OUTPUT)	–40°C TO 85°C								UNIT
			V_{CC} = 1.8 V ± 0.15 V		V_{CC} = 2.5 V ± 0.2 V		V_{CC} = 3.3 V ± 0.3 V		V_{CC} = 5 V ± 0.5 V		
			MIN	MAX	MIN	MAX	MIN	MAX	MIN	MAX	
t_{pd}	A	Y	3.8	11	2	6.5	1.8	5.5	1.2	5	ns

7.8 Switching Characteristics AC Limit, –40°C TO 125°C

over recommended operating free-air temperature range, C_L = 30 pF or 50 pF (unless otherwise noted) (see Figure 4)

PARAMETER	FROM (INPUT)	TO (OUTPUT)	–40°C TO 125°C								UNIT
			V_{CC} = 1.8 V ± 0.15 V		V_{CC} = 2.5 V ± 0.2 V		V_{CC} = 3.3 V ± 0.3 V		V_{CC} = 5 V ± 0.5 V		
			MIN	MAX	MIN	MAX	MIN	MAX	MIN	MAX	
t_{pd}	A	Y	3.8	13	2	8	1.8	6.5	1.2	6	ns

7.9 Operating Characteristics

T_A = 25°C

PARAMETER		TEST CONDITIONS	V_{CC} = 1.8 V	V_{CC} = 2.5 V	V_{CC} = 3.3 V	V_{CC} = 5 V	UNIT
			TYP	TYP	TYP	TYP	
C_{pd}	Power dissipation capacitance	f = 10 MHz	20	21	22	26	pF

7.10 Typical Characteristics

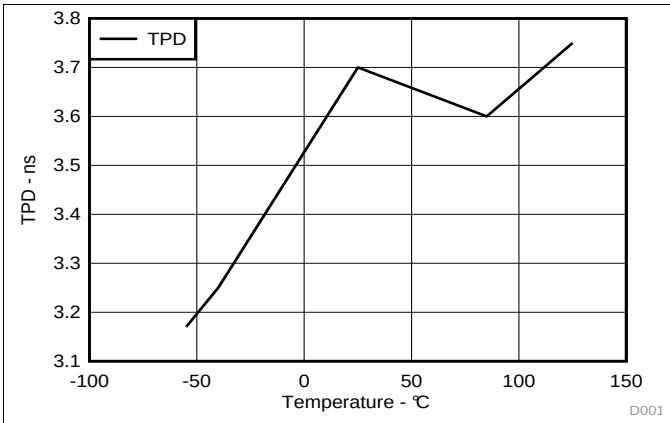

Figure 1. Across Temperature at 3.3V Vcc

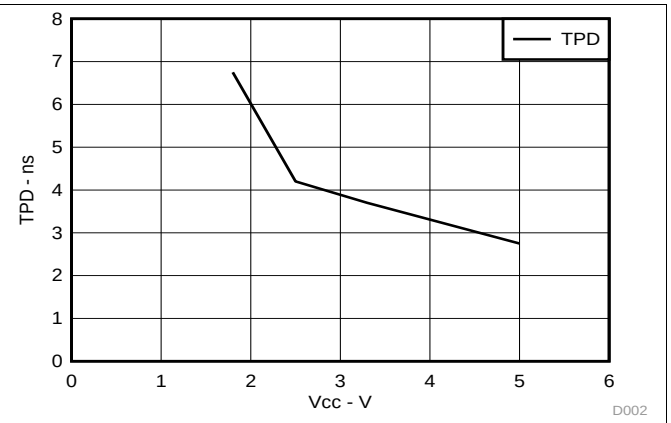

Figure 2. Across Vcc at 25°C

8 Parameter Measurement Information

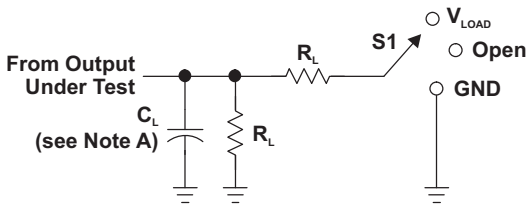

LOAD CIRCUIT

TEST	S1
t_{PLH}/t_{PHL}	Open
t_{PLZ}/t_{PZL}	V_{LOAD}
t_{PHZ}/t_{PZH}	GND

V_{CC}	INPUTS		V_M	V_{LOAD}	C_L	R_L	V_Δ
	V_I	t_r/t_f					
1.8 V ± 0.15 V	V_{CC}	≤2 ns	$V_{CC}/2$	2 × V_{CC}	15 pF	1 MΩ	0.15 V
2.5 V ± 0.2 V	V_{CC}	≤2 ns	$V_{CC}/2$	2 × V_{CC}	15 pF	1 MΩ	0.15 V
3.3 V ± 0.3 V	3 V	≤2.5 ns	1.5 V	6 V	15 pF	1 MΩ	0.3 V
5 V ± 0.5 V	V_{CC}	≤2.5 ns	$V_{CC}/2$	2 × V_{CC}	15 pF	1 MΩ	0.3 V

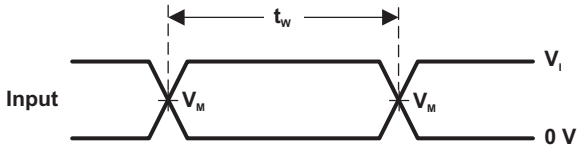

VOLTAGE WAVEFORMS
PULSE DURATION

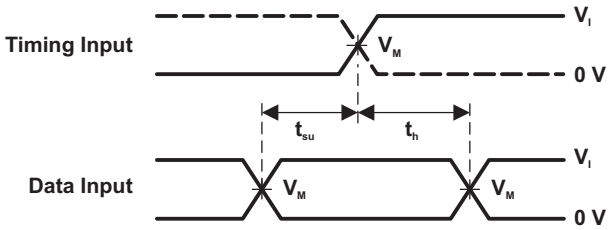

VOLTAGE WAVEFORMS
SETUP AND HOLD TIMES

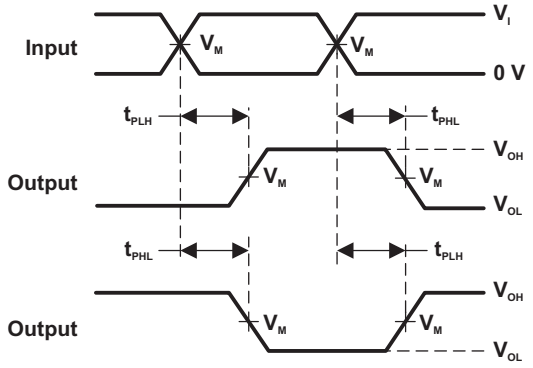

VOLTAGE WAVEFORMS
PROPAGATION DELAY TIMES
INVERTING AND NONINVERTING OUTPUTS

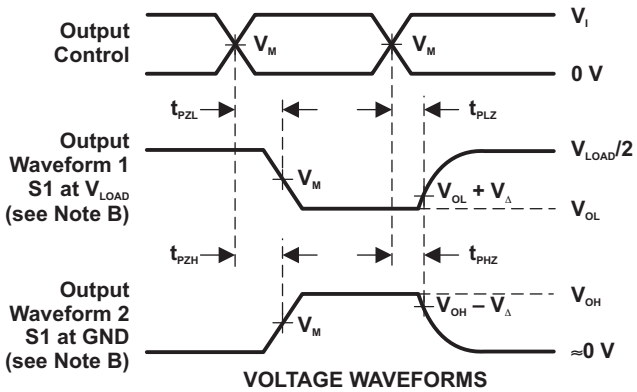

VOLTAGE WAVEFORMS
ENABLE AND DISABLE TIMES
LOW- AND HIGH-LEVEL ENABLING

NOTES: A. C_L includes probe and jig capacitance.
B. Waveform 1 is for an output with internal conditions such that the output is low, except when disabled by the output control. Waveform 2 is for an output with internal conditions such that the output is high, except when disabled by the output control.
C. All input pulses are supplied by generators having the following characteristics: PRR ≤ 10 MHz, Z_O = 50 Ω.
D. The outputs are measured one at a time, with one transition per measurement.
E. t_{PLZ} and t_{PHZ} are the same as t_{dis}.
F. t_{PZL} and t_{PZH} are the same as t_{en}.
G. t_{PLH} and t_{PHL} are the same as t_{pd}.
H. All parameters and waveforms are not applicable to all devices.

Figure 3. Load Circuit and Voltage Waveforms

Copyright © 2001–2014, Texas Instruments Incorporated

Parameter Measurement Information (continued)

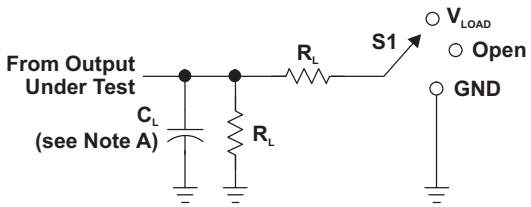

LOAD CIRCUIT

TEST	S1
t_{PLH}/t_{PHL}	Open
t_{PLZ}/t_{PZL}	V_{LOAD}
t_{PHZ}/t_{PZH}	GND

V_{CC}	INPUTS		V_M	V_{LOAD}	C_L	R_L	V_Δ
	V_I	t_r/t_f					
1.8 V ± 0.15 V	V_{CC}	≤2 ns	$V_{CC}/2$	2 × V_{CC}	30 pF	1 kΩ	0.15 V
2.5 V ± 0.2 V	V_{CC}	≤2 ns	$V_{CC}/2$	2 × V_{CC}	30 pF	500 Ω	0.15 V
3.3 V ± 0.3 V	3 V	≤2.5 ns	1.5 V	6 V	50 pF	500 Ω	0.3 V
5 V ± 0.5 V	V_{CC}	≤2.5 ns	$V_{CC}/2$	2 × V_{CC}	50 pF	500 Ω	0.3 V

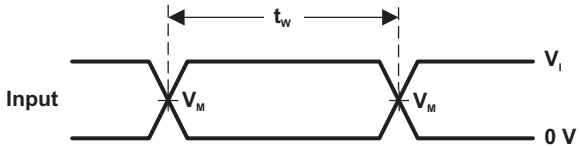

VOLTAGE WAVEFORMS
PULSE DURATION

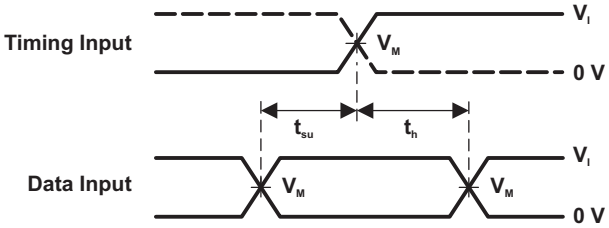

VOLTAGE WAVEFORMS
SETUP AND HOLD TIMES

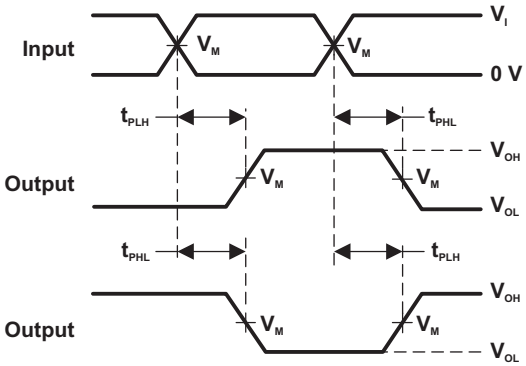

VOLTAGE WAVEFORMS
PROPAGATION DELAY TIMES
INVERTING AND NONINVERTING OUTPUTS

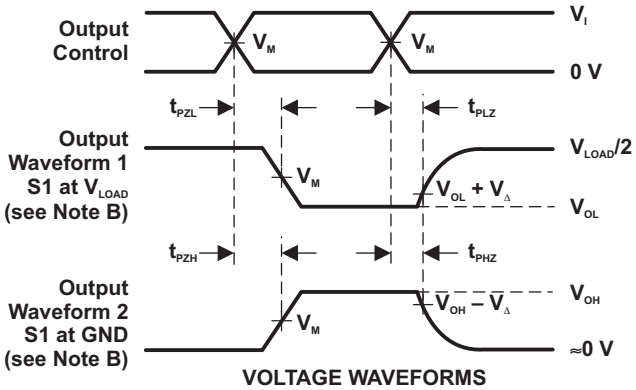

VOLTAGE WAVEFORMS
ENABLE AND DISABLE TIMES
LOW- AND HIGH-LEVEL ENABLING

NOTES:
A. C_L includes probe and jig capacitance.
B. Waveform 1 is for an output with internal conditions such that the output is low, except when disabled by the output control. Waveform 2 is for an output with internal conditions such that the output is high, except when disabled by the output control.
C. All input pulses are supplied by generators having the following characteristics: PRR ≤ 10 MHz, Z_O = 50 Ω.
D. The outputs are measured one at a time, with one transition per measurement.
E. t_{PLZ} and t_{PHZ} are the same as t_{dis}.
F. t_{PZL} and t_{PZH} are the same as t_{en}.
G. t_{PLH} and t_{PHL} are the same as t_{pd}.
H. All parameters and waveforms are not applicable to all devices.

Figure 4. Load Circuit and Voltage Waveforms

Copyright © 2001–2014, Texas Instruments Incorporated

9 Detailed Description

9.1 Overview

The SN74LVC1G17 device contains one Schmitt trigger buffer and performs the Boolean function Y = A. The device functions as an independent buffer, but because of Schmitt action, it will have different input threshold levels for a positive-going (VT+) and negative-going signals.

The DPW package technology is a major breakthrough in IC packaging. Its tiny 0.64 mm square footprint saves significant board space over other package options while still retaining the traditional manufacturing friendly lead pitch of 0.5 mm.

This device is fully specified for partial-power-down applications using I_{off}. The I_{off} circuitry disables the outputs, preventing damaging current backflow through the device when it is powered down.

9.2 Functional Block Diagram

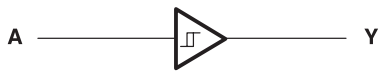

9.3 Feature Description

- Wide operating voltage range.
  - Operates From 1.65 V to 5.5 V.
- Allows Down voltage translation.
- Inputs accept voltages to 5.5 V.
- I_{off} feature allows voltages on the inputs and outputs, when V_{CC} is 0 V.

9.4 Device Functional Modes

Table 1. Function Table

INPUT A	OUTPUT Y
H	H
L	L

Copyright © 2001–2014, Texas Instruments Incorporated

10 Applications and Implementation

10.1 Application Information

The SN74LVC1G14 is a high drive CMOS device that can be used for a multitude of buffer type functions where the input is slow or noisy. It can produce 24 mA of drive current at 3.3 V making it Ideal for driving multiple outputs and good for high speed applications up to 100 MHz. The inputs are 5.5 V tolerant allowing it to translate down to V_{CC}.

10.2 Typical Application

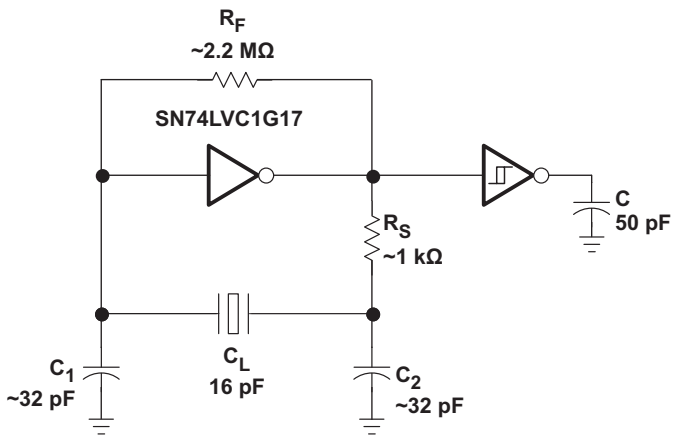

10.2.1 Design Requirements

This device uses CMOS technology and has balanced output drive. Care should be taken to avoid bus contention because it can drive currents that would exceed maximum limits. The high drive will also create fast edges into light loads so routing and load conditions should be considered to prevent ringing.

10.2.2 Detailed Design Procedure

1. Recommended Input Conditions
   - Rise time and fall time specs. See (Δt/ΔV) in the Recommended Operating Conditions table.
   - Specified high and low levels. See (V_{IH} and V_{IL}) in the Recommended Operating Conditions table.
   - Inputs are overvoltage tolerant allowing them to go as high as (V_I max) in the Recommended Operating Conditions table at any valid V_{CC} .
2. Recommend Output Conditions
   - Load currents should not exceed (I_O max) per output and should not exceed (continuous current through V_{CC} or GND) total current for the part. These limits are located in the Absolute Max Ratings table.
   - Outputs should not be pulled above V_{CC}.

Typical Application (continued)

10.2.3 Application Curves

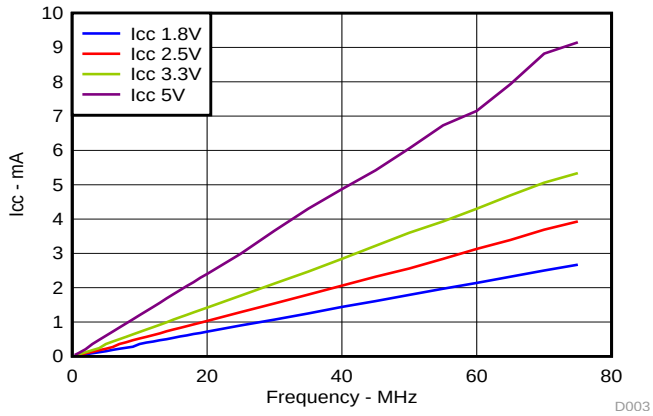

Figure 5. ICC vs Frequency

11 Power Supply Recommendations

The power supply can be any voltage between the min and max supply voltage rating located in the Recommended Operating Conditions table.

Each Vcc pin should have a good bypass capacitor to prevent power disturbance. For devices with a single supply a 0.1-μF capacitor is recommended and if there are multiple Vcc pins then a 0.01-μF or 0.022-μF capacitor is recommended for each power pin. It is ok to parallel multiple bypass caps to reject different frequencies of noise. 0.1-μF and 1-μF capacitors are commonly used in parallel. The bypass capacitor should be installed as close to the power pin as possible for best results.

12 Layout

12.1 Layout Guidelines

When using multiple bit logic devices inputs should not ever float. In many cases, functions or parts of functions of digital logic devices are unused, for example, when only two inputs of a triple-input AND gate are used or only 3 of the 4 buffer gates are used. Such input terminals should not be left unconnected because the undefined voltages at the outside connections result in undefined operational states. Specified below are the rules that must be observed under all circumstances. All unused inputs of digital logic devices must be connected to a high or low bias to prevent them from floating. The logic level that should be applied to any particular unused input depends on the function of the device. Generally they will be tied to Gnd or Vcc whichever make more sense or is more convenient.

12.2 Layout Example

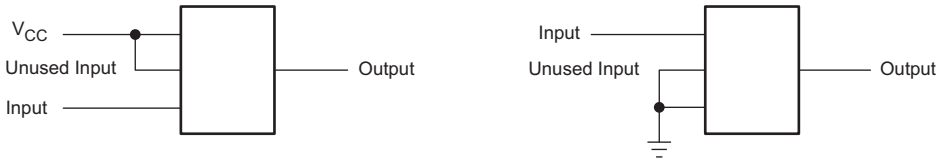

Copyright © 2001–2014, Texas Instruments Incorporated

13 Device and Documentation Support

13.1 Trademarks

All trademarks are the property of their respective owners.

13.2 Electrostatic Discharge Caution

These devices have limited built-in ESD protection. The leads should be shorted together or the device placed in conductive foam during storage or handling to prevent electrostatic damage to the MOS gates.

13.3 Glossary

SLYZ022 — *TI Glossary*.

This glossary lists and explains terms, acronyms and definitions.

14 Mechanical, Packaging, and Orderable Information

The following pages include mechanical packaging and orderable information. This information is the most current data available for the designated devices. This data is subject to change without notice and revision of this document. For browser-based versions of this data sheet, refer to the left-hand navigation.

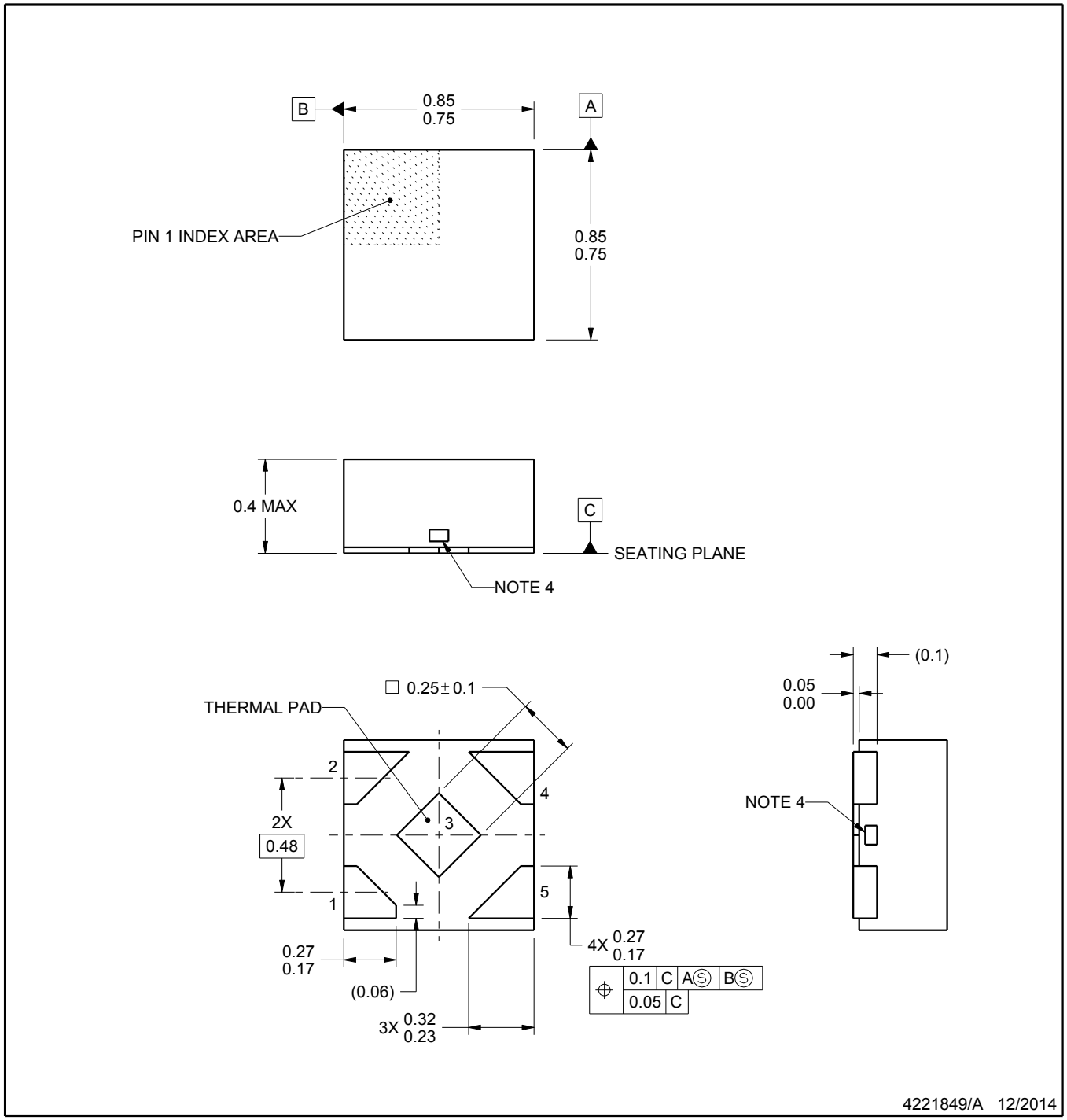

NOTES:

1. All linear dimensions are in millimeters. Any dimensions in parenthesis are for reference only. Dimensioning and tolerancing per ASME Y14.5M.
2. This drawing is subject to change without notice.
3. The package thermal pad must be soldered to the printed circuit board for thermal and mechanical performance.
4. The size and shape of this feature may vary.

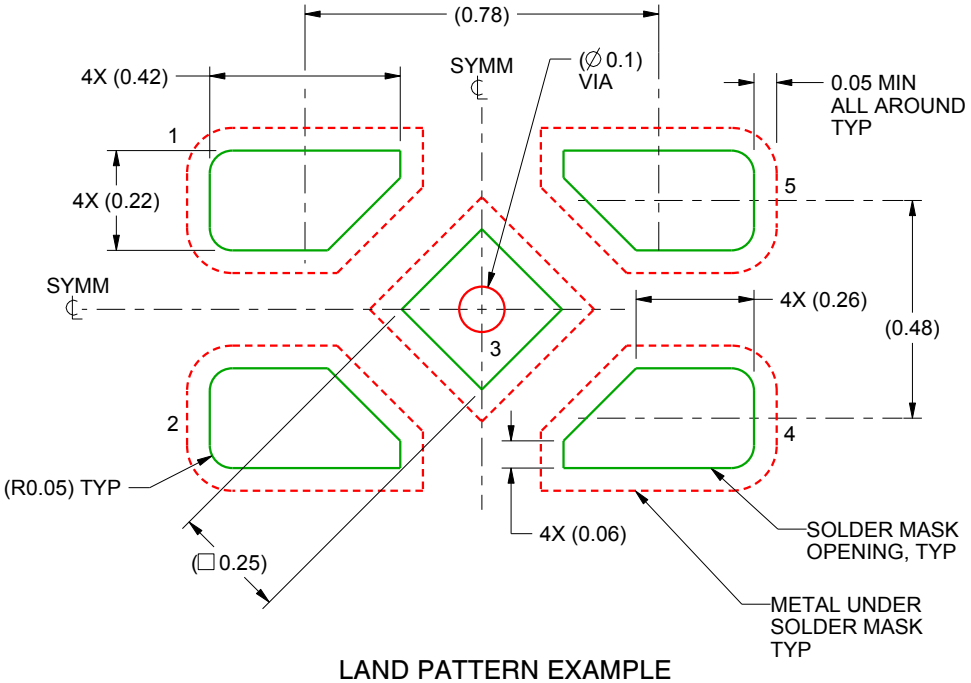

LAND PATTERN EXAMPLE
SOLDER MASK DEFINED
SCALE:60X

4221849/A 12/2014

NOTES: (continued)

5. This package is designed to be soldered to a thermal pad on the board. For more information, refer to QFN/SON PCB application note in literature No. SLUA271 (www.ti.com/lit/slua271).

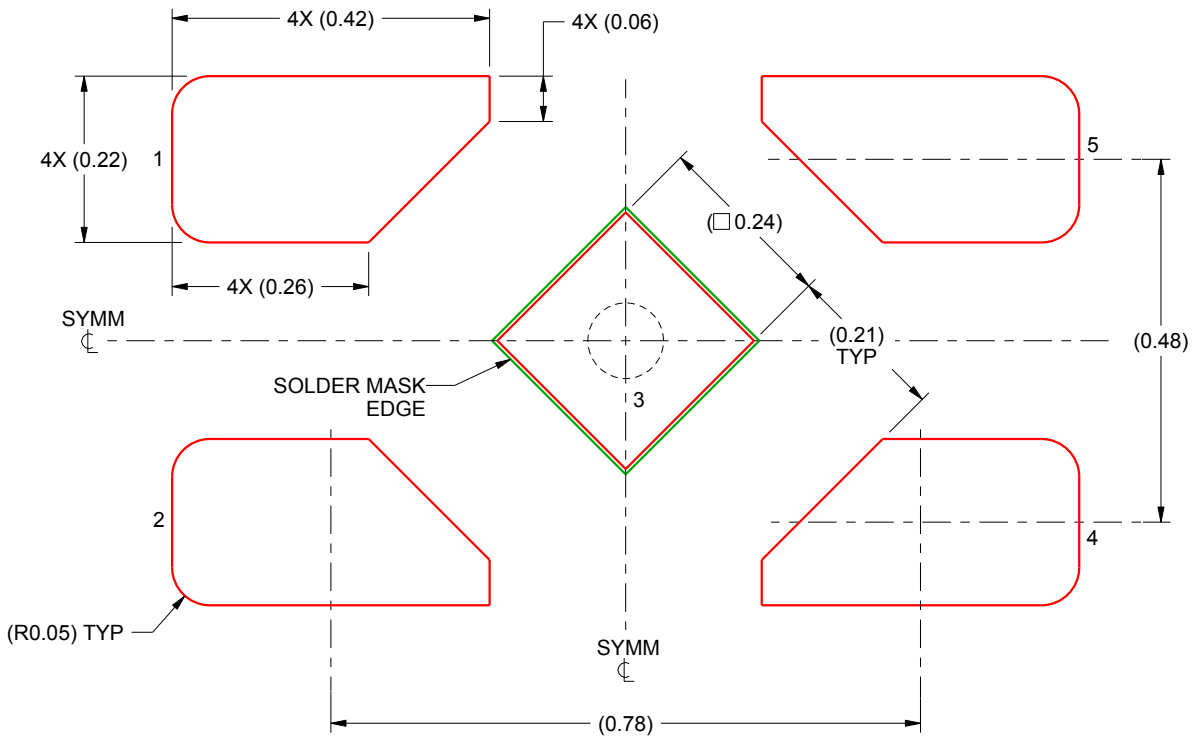

SOLDER PASTE EXAMPLE
BASED ON 0.1 mm THICK STENCIL

EXPOSED PAD
92% PRINTED SOLDER COVERAGE BY AREA
SCALE:100X

4221849/A 12/2014

NOTES: (continued)

6. Laser cutting apertures with trapezoidal walls and rounded corners may offer better paste release. IPC-7525 may have alternate design recommendations.

PACKAGING INFORMATION

Orderable Device	Status (1)	Package Type	Package Drawing	Pins	Package Qty	Eco Plan (2)	Lead/Ball Finish (6)	MSL Peak Temp (3)	Op Temp (°C)	Device Marking (4/5)	Samples
SN74LVC1G17DBVR	ACTIVE	SOT-23	DBV	5	3000	Green (RoHS & no Sb/Br)	CU NIPDAU	Level-1-260C-UNLIM	-40 to 125	(C175 ~ C17F ~ C17K ~ C17R) (C17H ~ C17P ~ C17S)	Samples
SN74LVC1G17DBVRE4	ACTIVE	SOT-23	DBV	5	3000	Green (RoHS & no Sb/Br)	CU NIPDAU	Level-1-260C-UNLIM	-40 to 125	C17F	Samples
SN74LVC1G17DBVRG4	ACTIVE	SOT-23	DBV	5	3000	Green (RoHS & no Sb/Br)	CU NIPDAU	Level-1-260C-UNLIM	-40 to 125	C17F	Samples
SN74LVC1G17DBVT	ACTIVE	SOT-23	DBV	5	250	Green (RoHS & no Sb/Br)	CU NIPDAU	Level-1-260C-UNLIM	-40 to 125	(C175 ~ C17F ~ C17K ~ C17R) (C17H ~ C17P ~ C17S)	Samples
SN74LVC1G17DBVTE4	ACTIVE	SOT-23	DBV	5	250	Green (RoHS & no Sb/Br)	CU NIPDAU	Level-1-260C-UNLIM	-40 to 125	C17F	Samples
SN74LVC1G17DBVTG4	ACTIVE	SOT-23	DBV	5	250	Green (RoHS & no Sb/Br)	CU NIPDAU	Level-1-260C-UNLIM	-40 to 125	C17F	Samples
SN74LVC1G17DCKR	ACTIVE	SC70	DCK	5	3000	Green (RoHS & no Sb/Br)	CU NIPDAU	Level-1-260C-UNLIM	-40 to 125	(C75 ~ C7F ~ C7K ~ C7R ~ C7T) (C7H ~ C7P ~ C7S)	Samples
SN74LVC1G17DCKRE4	ACTIVE	SC70	DCK	5	3000	Green (RoHS & no Sb/Br)	CU NIPDAU	Level-1-260C-UNLIM	-40 to 125	(C75 ~ C7F ~ C7K ~ C7R ~ C7T) (C7H ~ C7P ~ C7S)	Samples
SN74LVC1G17DCKRG4	ACTIVE	SC70	DCK	5	3000	Green (RoHS & no Sb/Br)	CU NIPDAU	Level-1-260C-UNLIM	-40 to 125	(C75 ~ C7F ~ C7K ~ C7R ~ C7T) (C7H ~ C7P ~ C7S)	Samples
SN74LVC1G17DCKT	ACTIVE	SC70	DCK	5	250	Green (RoHS & no Sb/Br)	CU NIPDAU	Level-1-260C-UNLIM	-40 to 125	(C75 ~ C7F ~ C7K ~ C7R ~ C7T) (C7H ~ C7P ~ C7S)	Samples
SN74LVC1G17DCKTE4	ACTIVE	SC70	DCK	5	250	Green (RoHS & no Sb/Br)	CU NIPDAU	Level-1-260C-UNLIM	-40 to 125	(C75 ~ C7F ~ C7K ~ C7R ~ C7T) (C7H ~ C7P ~ C7S)	Samples
SN74LVC1G17DCKTG4	ACTIVE	SC70	DCK	5	250	Green (RoHS & no Sb/Br)	CU NIPDAU	Level-1-260C-UNLIM	-40 to 125	(C75 ~ C7F ~ C7K ~ C7R ~ C7T) (C7H ~ C7P ~ C7S)	Samples
SN74LVC1G17DPWR	ACTIVE	X2SON	DPW	4	3000	Green (RoHS & no Sb/Br)	CU NIPDAU	Level-1-260C-UNLIM	-40 to 125	S4	Samples

Orderable Device	Status (1)	Package Type	Package Drawing	Pins	Package Qty	Eco Plan (2)	Lead/Ball Finish (6)	MSL Peak Temp (3)	Op Temp (°C)	Device Marking (4/5)	Samples
SN74LVC1G17DRLR	ACTIVE	SOT	DRL	5	4000	Green (RoHS & no Sb/Br)	CU NIPDAU	Level-1-260C-UNLIM	-40 to 125	(C77 ~ C7R)	Samples
SN74LVC1G17DRLRG4	ACTIVE	SOT	DRL	5	4000	Green (RoHS & no Sb/Br)	CU NIPDAU	Level-1-260C-UNLIM	-40 to 125	(C77 ~ C7R)	Samples
SN74LVC1G17DRY2	PREVIEW	SON	DRY	6	5000	Green (RoHS & no Sb/Br)	CU NIPDAU	Level-1-260C-UNLIM	-40 to 125	C7	
SN74LVC1G17DRYR	ACTIVE	SON	DRY	6	5000	Green (RoHS & no Sb/Br)	CU NIPDAU	Level-1-260C-UNLIM	-40 to 125	C7	Samples
SN74LVC1G17DSF2	PREVIEW	SON	DSF	6	5000	Green (RoHS & no Sb/Br)	CU NIPDAU | CU NIPDAUAG	Level-1-260C-UNLIM	-40 to 125	C7	
SN74LVC1G17DSFR	ACTIVE	SON	DSF	6	5000	Green (RoHS & no Sb/Br)	CU NIPDAU | CU NIPDAUAG	Level-1-260C-UNLIM	-40 to 125	C7	Samples
SN74LVC1G17YZPR	ACTIVE	DSBGA	YZP	5	3000	Green (RoHS & no Sb/Br)	SNAGCU	Level-1-260C-UNLIM	-40 to 85	(C77 ~ C7N)	Samples
SN74LVC1G17YZVR	ACTIVE	DSBGA	YZV	4	3000	Green (RoHS & no Sb/Br)	SNAGCU	Level-1-260C-UNLIM	-40 to 85	C7 (7 ~ N)	Samples

(1) The marketing status values are defined as follows:
ACTIVE: Product device recommended for new designs.
LIFEBUY: TI has announced that the device will be discontinued, and a lifetime-buy period is in effect.
NRND: Not recommended for new designs. Device is in production to support existing customers, but TI does not recommend using this part in a new design.
PREVIEW: Device has been announced but is not in production. Samples may or may not be available.
OBSOLETE: TI has discontinued the production of the device.

(2) Eco Plan - The planned eco-friendly classification: Pb-Free (RoHS), Pb-Free (RoHS Exempt), or Green (RoHS & no Sb/Br) - please check http://www.ti.com/productcontent for the latest availability information and additional product content details.
TBD: The Pb-Free/Green conversion plan has not been defined.
Pb-Free (RoHS): TI's terms "Lead-Free" or "Pb-Free" mean semiconductor products that are compatible with the current RoHS requirements for all 6 substances, including the requirement that lead not exceed 0.1% by weight in homogeneous materials. Where designed to be soldered at high temperatures, TI Pb-Free products are suitable for use in specified lead-free processes.
Pb-Free (RoHS Exempt): This component has a RoHS exemption for either 1) lead-based flip-chip solder bumps used between the die and package, or 2) lead-based die adhesive used between the die and leadframe. The component is otherwise considered Pb-Free (RoHS compatible) as defined above.
Green (RoHS & no Sb/Br): TI defines "Green" to mean Pb-Free (RoHS compatible), and free of Bromine (Br) and Antimony (Sb) based flame retardants (Br or Sb do not exceed 0.1% by weight in homogeneous material)

(3) MSL, Peak Temp. - The Moisture Sensitivity Level rating according to the JEDEC industry standard classifications, and peak solder temperature.

(4) There may be additional marking, which relates to the logo, the lot trace code information, or the environmental category on the device.

(5) Multiple Device Markings will be inside parentheses. Only one Device Marking contained in parentheses and separated by a "~" will appear on a device. If a line is indented then it is a continuation of the previous line and the two combined represent the entire Device Marking for that device.

(6) Lead/Ball Finish - Orderable Devices may have multiple material finish options. Finish options are separated by a vertical ruled line. Lead/Ball Finish values may wrap to two lines if the finish value exceeds the maximum column width.

Important Information and Disclaimer: The information provided on this page represents TI's knowledge and belief as of the date that it is provided. TI bases its knowledge and belief on information provided by third parties, and makes no representation or warranty as to the accuracy of such information. Efforts are underway to better integrate information from third parties. TI has taken and continues to take reasonable steps to provide representative and accurate information but may not have conducted destructive testing or chemical analysis on incoming materials and chemicals. TI and TI suppliers consider certain information to be proprietary, and thus CAS numbers and other limited information may not be available for release.

In no event shall TI's liability arising out of such information exceed the total purchase price of the TI part(s) at issue in this document sold by TI to Customer on an annual basis.

OTHER QUALIFIED VERSIONS OF SN74LVC1G17 :

- Automotive: SN74LVC1G17-Q1
- Enhanced Product: SN74LVC1G17-EP

NOTE: Qualified Version Definitions:

- Automotive - Q100 devices qualified for high-reliability automotive applications targeting zero defects
- Enhanced Product - Supports Defense, Aerospace and Medical Applications

TAPE AND REEL INFORMATION

REEL DIMENSIONS

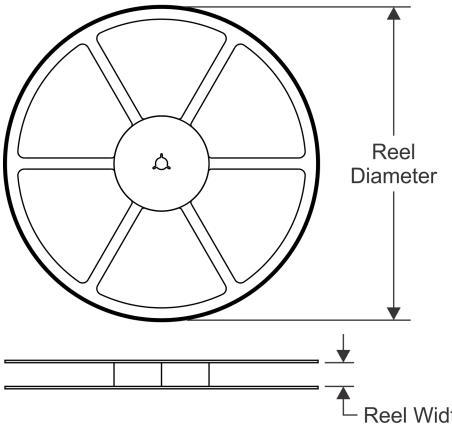

TAPE DIMENSIONS

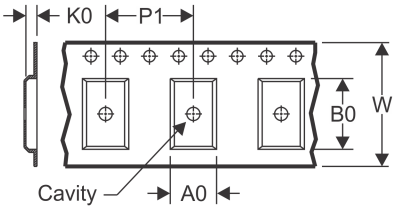

A0	Dimension designed to accommodate the component width
B0	Dimension designed to accommodate the component length
K0	Dimension designed to accommodate the component thickness
W	Overall width of the carrier tape
P1	Pitch between successive cavity centers

QUADRANT ASSIGNMENTS FOR PIN 1 ORIENTATION IN TAPE

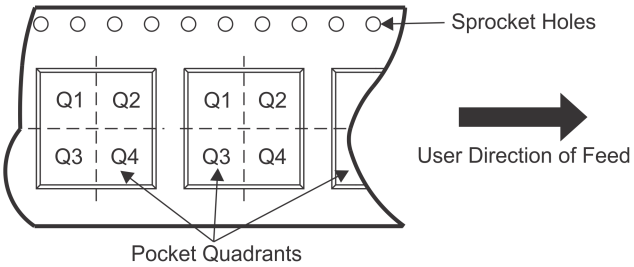

*All dimensions are nominal

Device	Package Type	Package Drawing	Pins	SPQ	Reel Diameter (mm)	Reel Width W1 (mm)	A0 (mm)	B0 (mm)	K0 (mm)	P1 (mm)	W (mm)	Pin1 Quadrant
SN74LVC1G17DBVR	SOT-23	DBV	5	3000	180.0	9.2	3.17	3.23	1.37	4.0	8.0	Q3
SN74LVC1G17DBVR	SOT-23	DBV	5	3000	180.0	8.4	3.23	3.17	1.37	4.0	8.0	Q3
SN74LVC1G17DBVRG4	SOT-23	DBV	5	3000	178.0	9.0	3.23	3.17	1.37	4.0	8.0	Q3
SN74LVC1G17DBVTG4	SOT-23	DBV	5	250	178.0	9.0	3.23	3.17	1.37	4.0	8.0	Q3
SN74LVC1G17DCKR	SC70	DCK	5	3000	178.0	9.0	2.4	2.5	1.2	4.0	8.0	Q3
SN74LVC1G17DCKR	SC70	DCK	5	3000	178.0	9.2	2.4	2.4	1.22	4.0	8.0	Q3
SN74LVC1G17DCKT	SC70	DCK	5	250	178.0	9.0	2.4	2.5	1.2	4.0	8.0	Q3
SN74LVC1G17DCKT	SC70	DCK	5	250	180.0	9.2	2.3	2.55	1.2	4.0	8.0	Q3
SN74LVC1G17DCKT	SC70	DCK	5	250	178.0	9.2	2.4	2.4	1.22	4.0	8.0	Q3
SN74LVC1G17DRLR	SOT	DRL	5	4000	180.0	8.4	1.98	1.78	0.69	4.0	8.0	Q3
SN74LVC1G17DRYR	SON	DRY	6	5000	179.0	8.4	1.2	1.65	0.7	4.0	8.0	Q1
SN74LVC1G17DSFR	SON	DSF	6	5000	180.0	9.5	1.16	1.16	0.5	4.0	8.0	Q2
SN74LVC1G17YZPR	DSBGA	YZP	5	3000	178.0	9.2	1.02	1.52	0.63	4.0	8.0	Q1
SN74LVC1G17YZVR	DSBGA	YZV	4	3000	178.0	9.2	1.0	1.0	0.63	4.0	8.0	Q1

TAPE AND REEL BOX DIMENSIONS

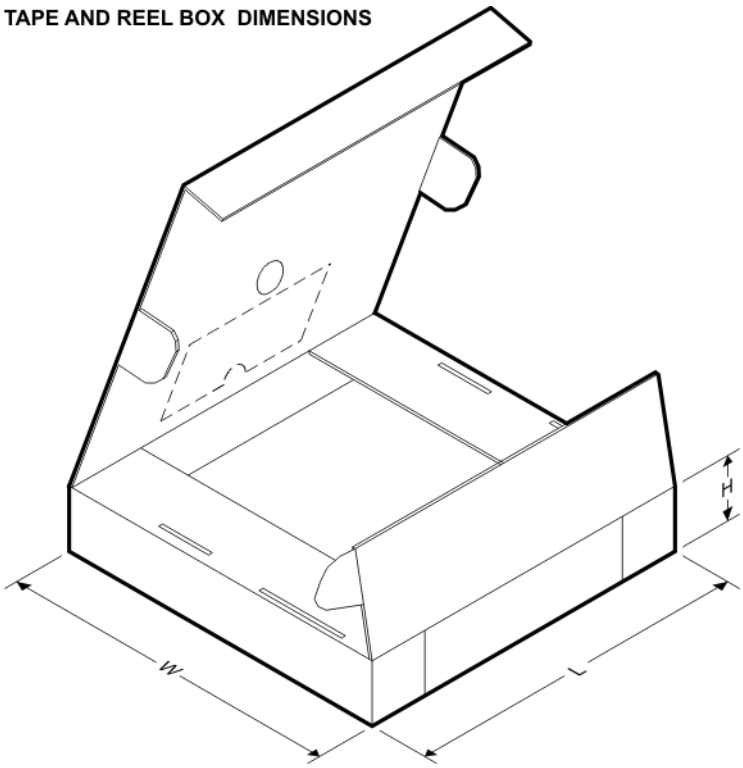

*All dimensions are nominal

Device	Package Type	Package Drawing	Pins	SPQ	Length (mm)	Width (mm)	Height (mm)
SN74LVC1G17DBVR	SOT-23	DBV	5	3000	205.0	200.0	33.0
SN74LVC1G17DBVR	SOT-23	DBV	5	3000	202.0	201.0	28.0
SN74LVC1G17DBVRG4	SOT-23	DBV	5	3000	180.0	180.0	18.0
SN74LVC1G17DBVTG4	SOT-23	DBV	5	250	180.0	180.0	18.0
SN74LVC1G17DCKR	SC70	DCK	5	3000	180.0	180.0	18.0
SN74LVC1G17DCKR	SC70	DCK	5	3000	180.0	180.0	18.0
SN74LVC1G17DCKT	SC70	DCK	5	250	180.0	180.0	18.0
SN74LVC1G17DCKT	SC70	DCK	5	250	205.0	200.0	33.0
SN74LVC1G17DCKT	SC70	DCK	5	250	180.0	180.0	18.0
SN74LVC1G17DRLR	SOT	DRL	5	4000	202.0	201.0	28.0
SN74LVC1G17DRYR	SON	DRY	6	5000	203.0	203.0	35.0
SN74LVC1G17DSFR	SON	DSF	6	5000	184.0	184.0	19.0
SN74LVC1G17YZPR	DSBGA	YZP	5	3000	220.0	220.0	35.0
SN74LVC1G17YZVR	DSBGA	YZV	4	3000	220.0	220.0	35.0

DBV (R–PDSO–G5) PLASTIC SMALL–OUTLINE PACKAGE

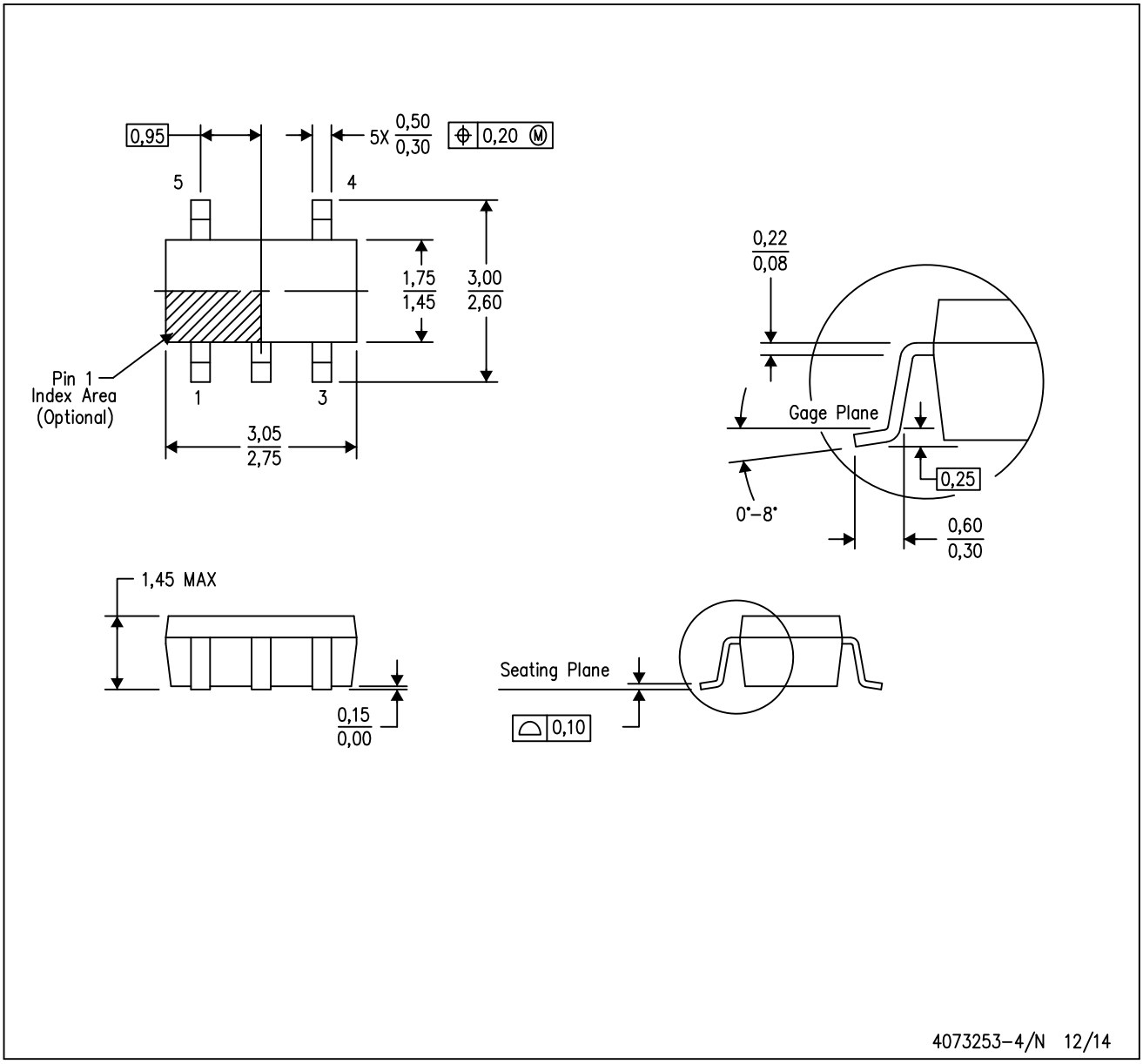

NOTES:
A. All linear dimensions are in millimeters.
B. This drawing is subject to change without notice.
C. Body dimensions do not include mold flash or protrusion. Mold flash and protrusion shall not exceed 0.15 per side.
D. Falls within JEDEC MO–178 Variation AA.

DBV (R-PDSO-G5) PLASTIC SMALL OUTLINE

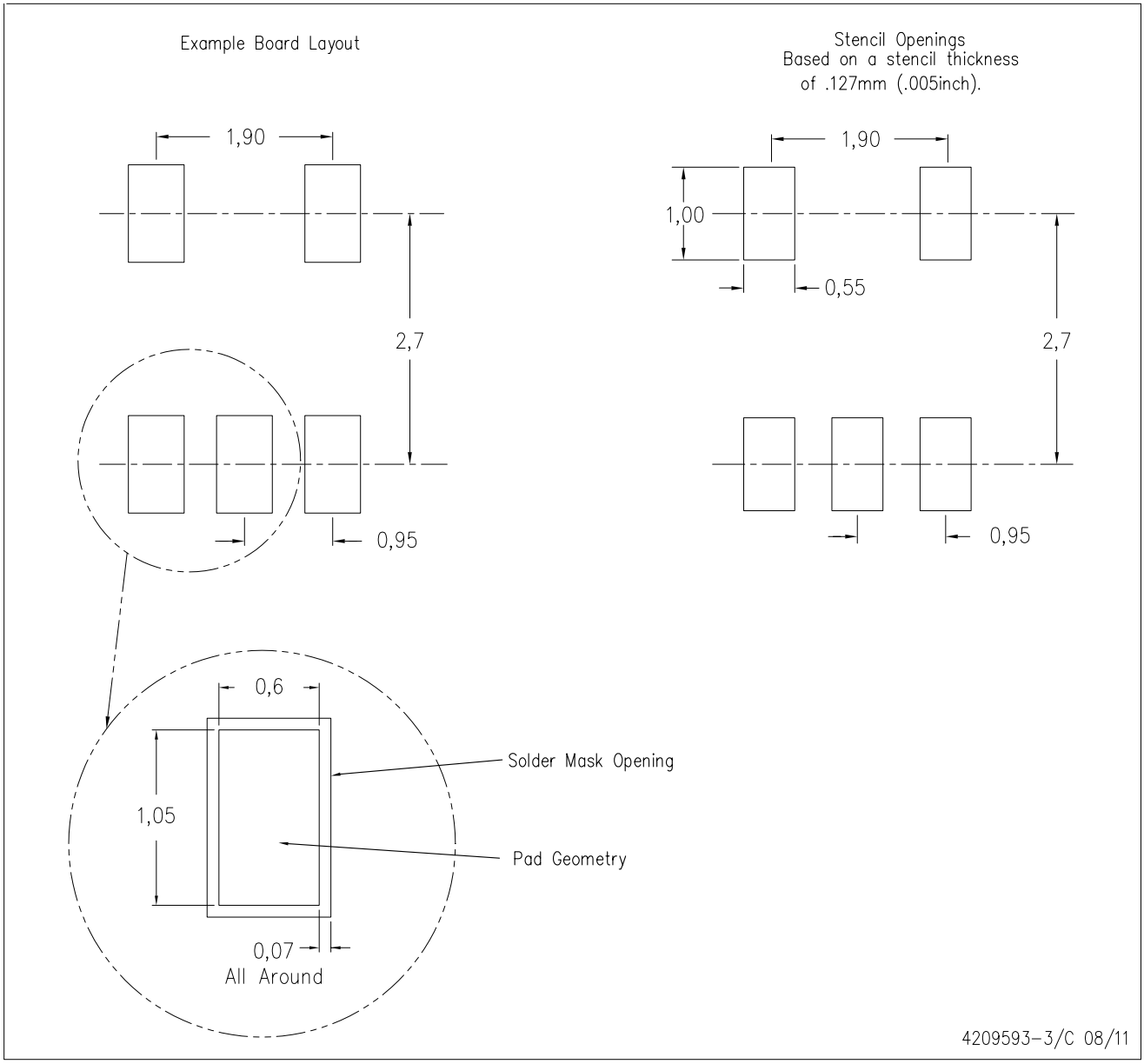

NOTES:
A. All linear dimensions are in millimeters.
B. This drawing is subject to change without notice.
C. Customers should place a note on the circuit board fabrication drawing not to alter the center solder mask defined pad.
D. Publication IPC-7351 is recommended for alternate designs.
E. Laser cutting apertures with trapezoidal walls and also rounding corners will offer better paste release. Customers should contact their board assembly site for stencil design recommendations. Example stencil design based on a 50% volumetric metal load solder paste. Refer to IPC-7525 for other stencil recommendations.

DCK (R–PDSO–G5) PLASTIC SMALL–OUTLINE PACKAGE

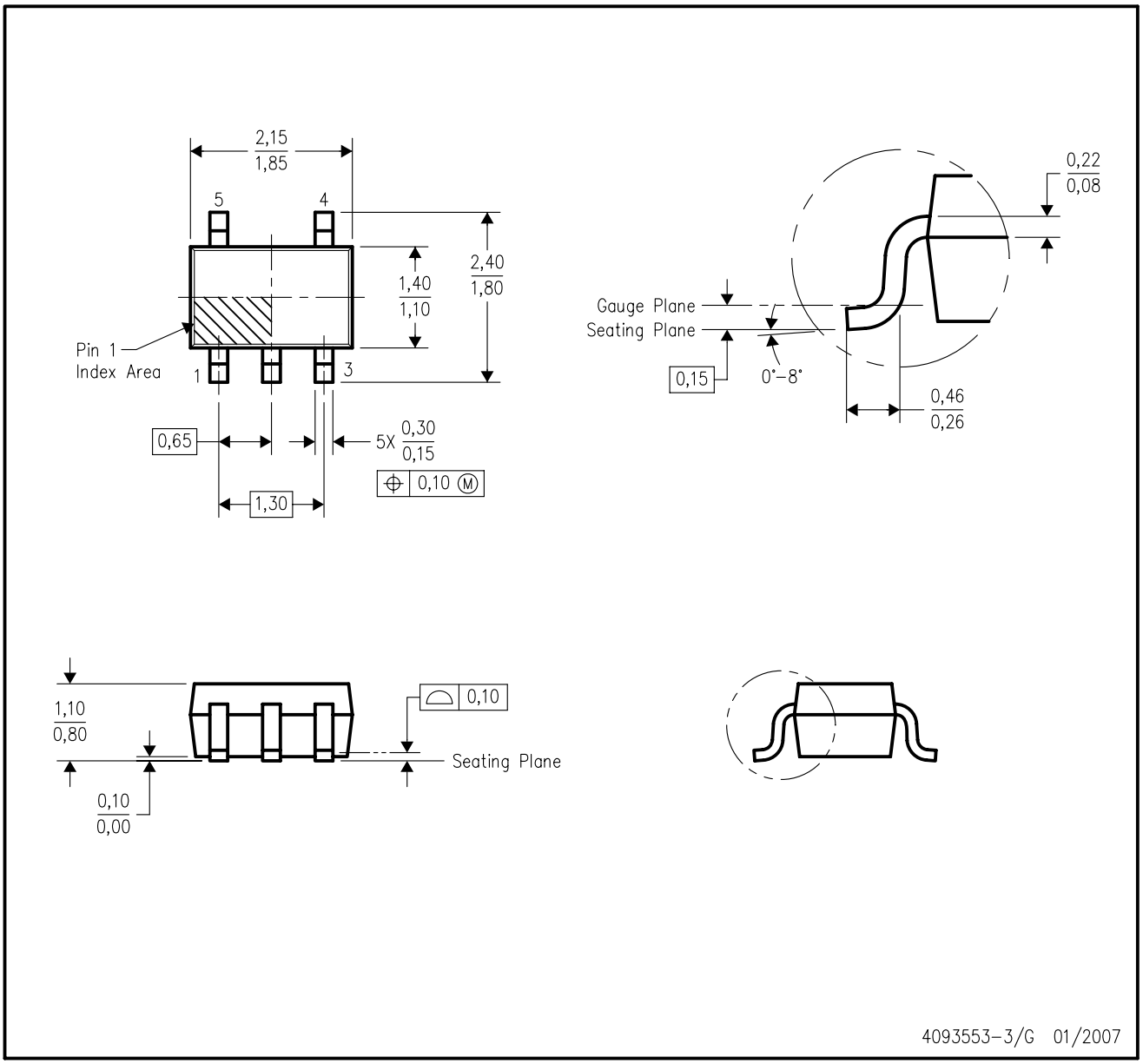

NOTES:
A. All linear dimensions are in millimeters.
B. This drawing is subject to change without notice.
C. Body dimensions do not include mold flash or protrusion. Mold flash and protrusion shall not exceed 0.15 per side.
D. Falls within JEDEC MO–203 variation AA.

DCK (R-PDSO-G5) PLASTIC SMALL OUTLINE

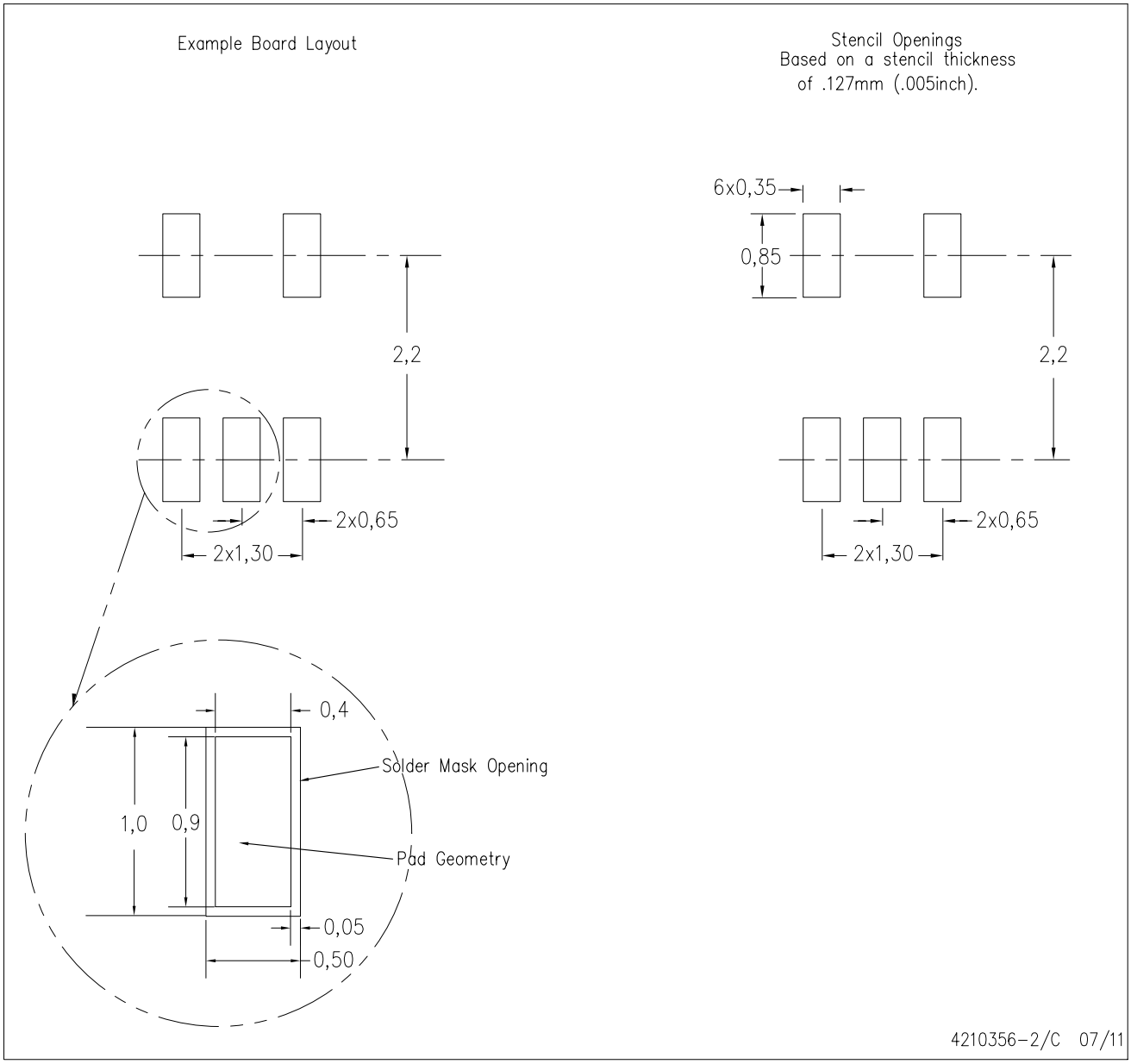

NOTES:
A. All linear dimensions are in millimeters.
B. This drawing is subject to change without notice.
C. Customers should place a note on the circuit board fabrication drawing not to alter the center solder mask defined pad.
D. Publication IPC-7351 is recommended for alternate designs.
E. Laser cutting apertures with trapezoidal walls and also rounding corners will offer better paste release. Customers should contact their board assembly site for stencil design recommendations. Example stencil design based on a 50% volumetric metal load solder paste. Refer to IPC-7525 for other stencil recommendations.

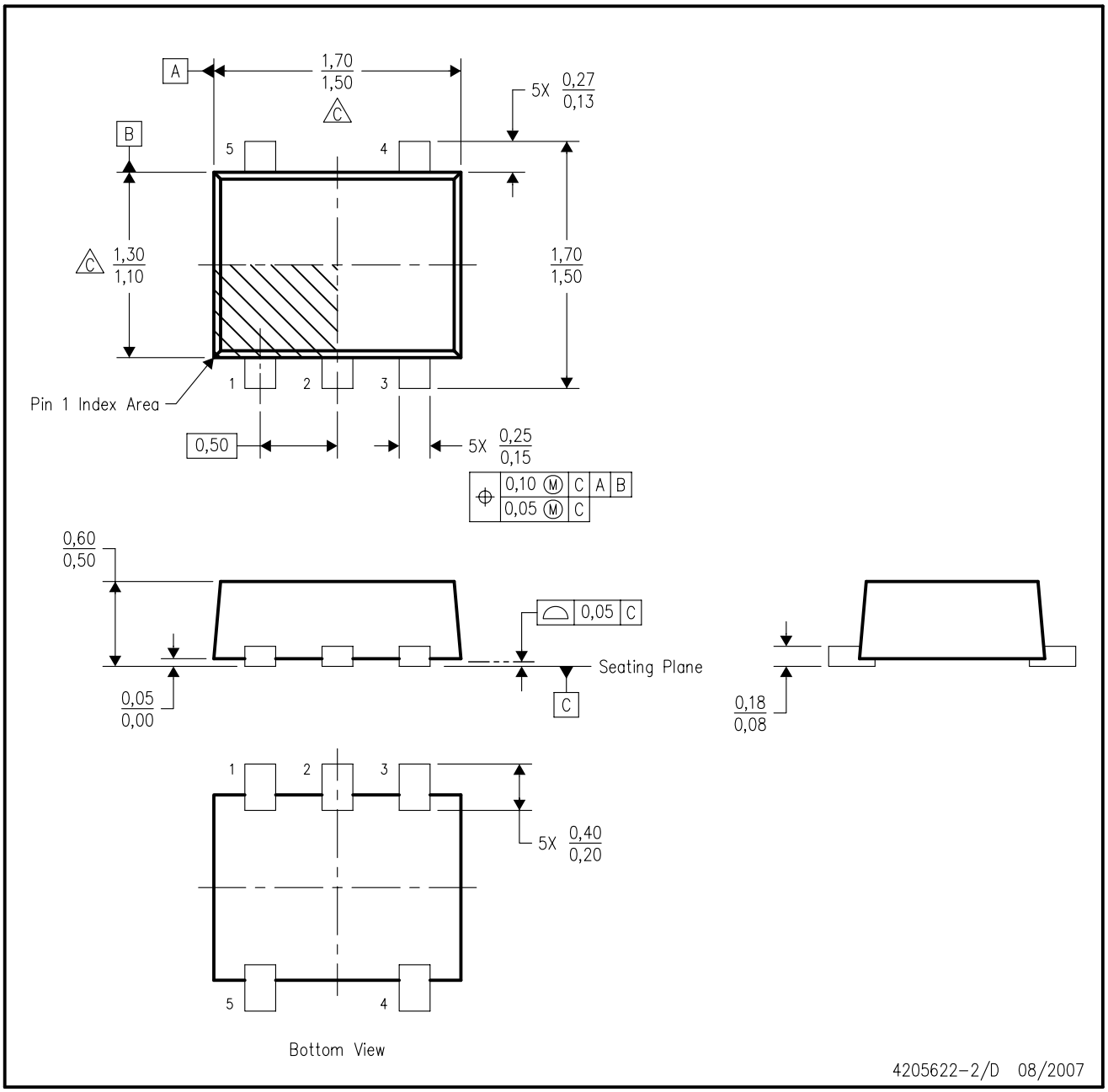

NOTES:
A. All linear dimensions are in millimeters. Dimensioning and tolerancing per ASME Y14.5M–1994.
B. This drawing is subject to change without notice.
C. Body dimensions do not include mold flash, interlead flash, protrusions, or gate burrs. Mold flash, interlead flash, protrusions, or gate burrs shall not exceed 0,15 per end or side.
D. JEDEC package registration is pending.

DRL (R–PDSO–N5) PLASTIC SMALL OUTLINE

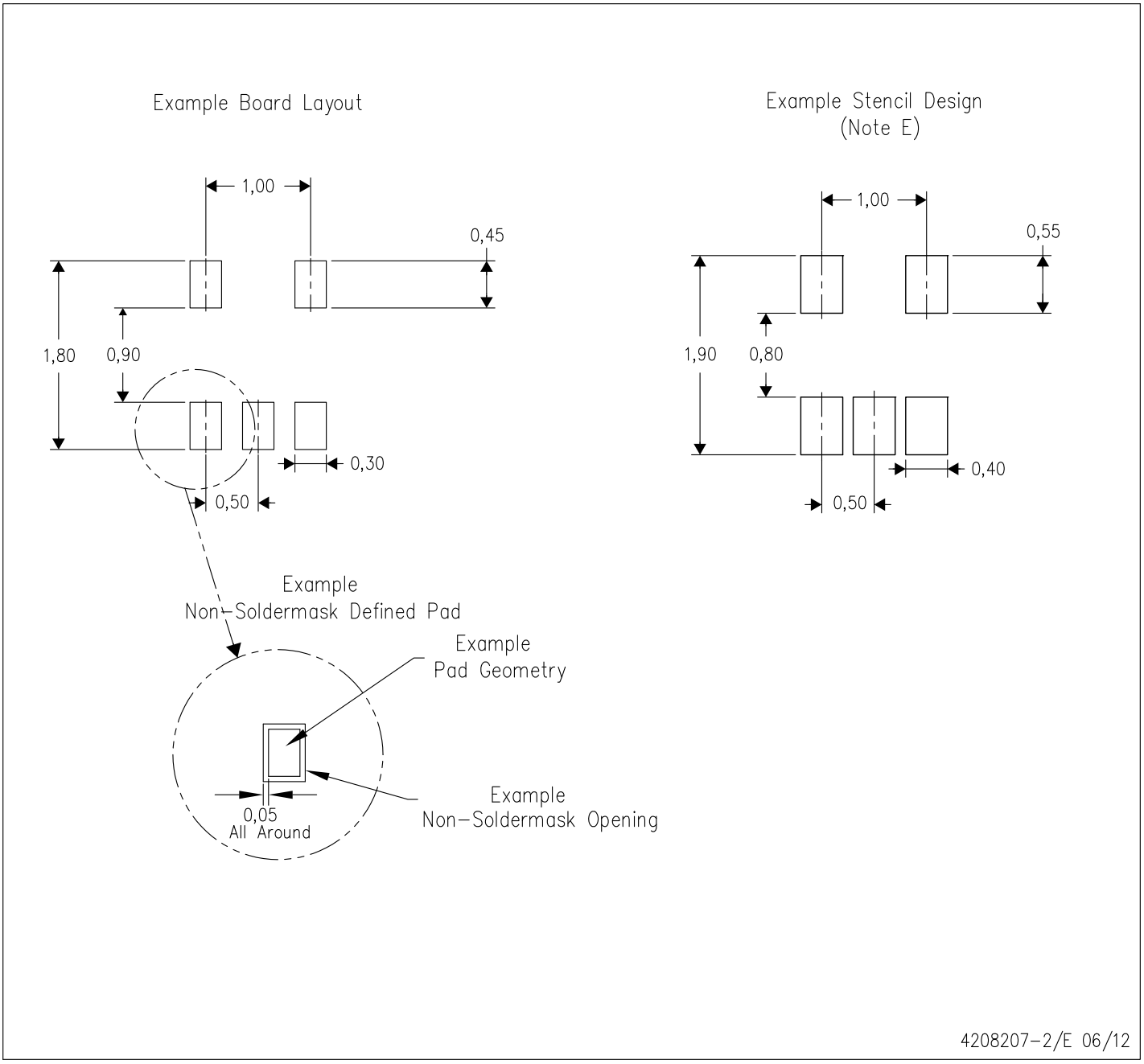

NOTES:
A. All linear dimensions are in millimeters.
B. This drawing is subject to change without notice.
C. Publication IPC–7351 is recommended for alternate designs.
D. Customers should contact their board fabrication site for minimum solder mask web tolerances between signal pads.
E. Maximum stencil thickness 0,127 mm (5 mils). All linear dimensions are in millimeters.
F. Laser cutting apertures with trapezoidal walls and also rounding corners will offer better paste release. Customers should contact their board assembly site for stencil design recommendations. Refer to IPC 7525 for stencil design considerations.
G. Side aperture dimensions over–print land for acceptable area ratio > 0.66. Customer may reduce side aperture dimensions if stencil manufacturing process allows for sufficient release at smaller opening.

DRY (R–PUSON–N6) PLASTIC SMALL OUTLINE NO–LEAD

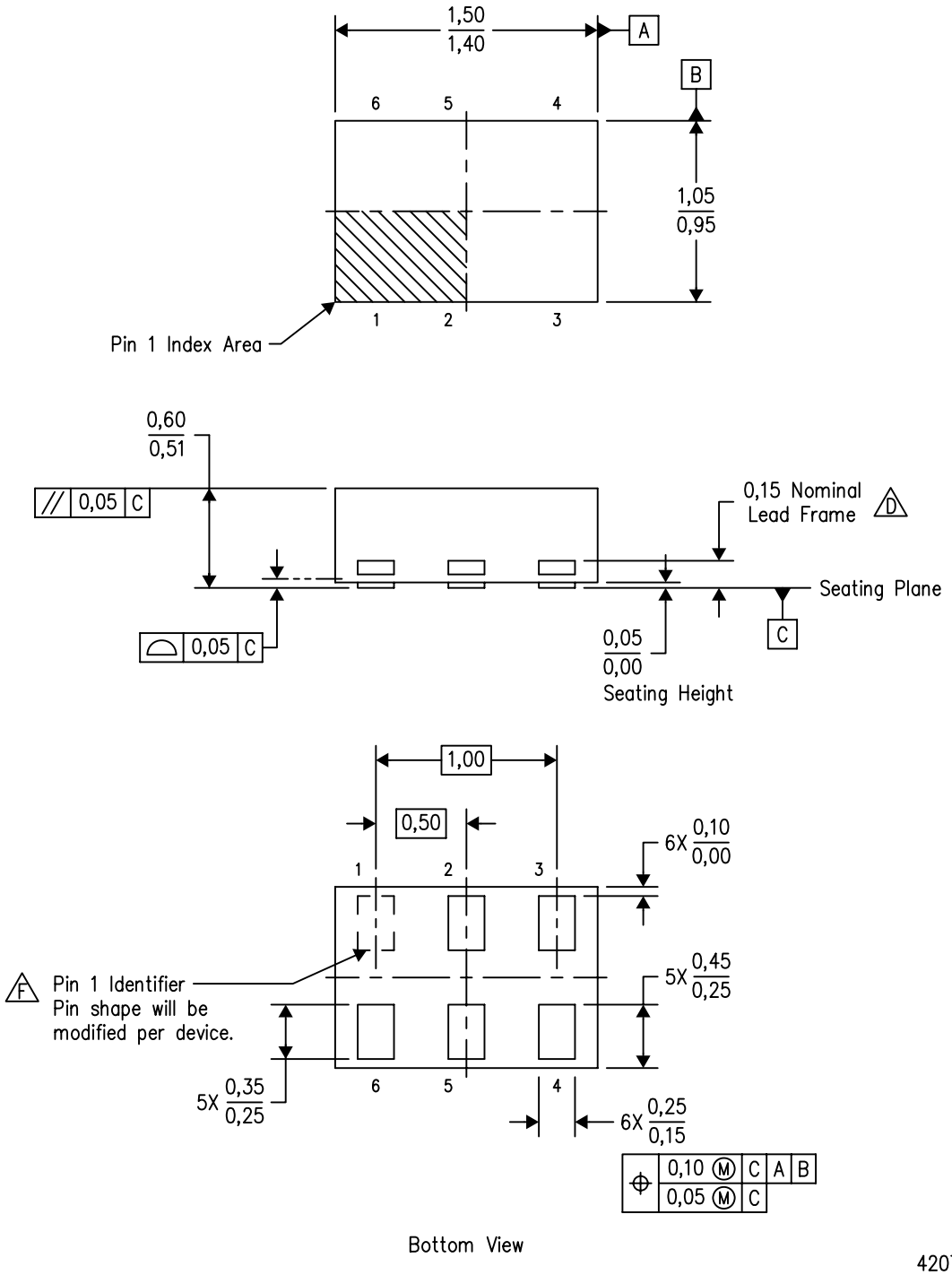

4207181/F 12/11

NOTES:
A. All linear dimensions are in millimeters. Dimensioning and tolerancing per ASME Y14.5M–1994.
B. This drawing is subject to change without notice.
C. SON (Small Outline No–Lead) package configuration.
D. The exposed lead frame feature on side of package may or may not be present due to alternative lead frame designs.
E. This package complies to JEDEC MO–287 variation UFAD.
F. See the additional figure in the Product Data Sheet for details regarding the pin 1 identifier shape.

DRY (R–PUSON–N6) PLASTIC SMALL OUTLINE NO–LEAD

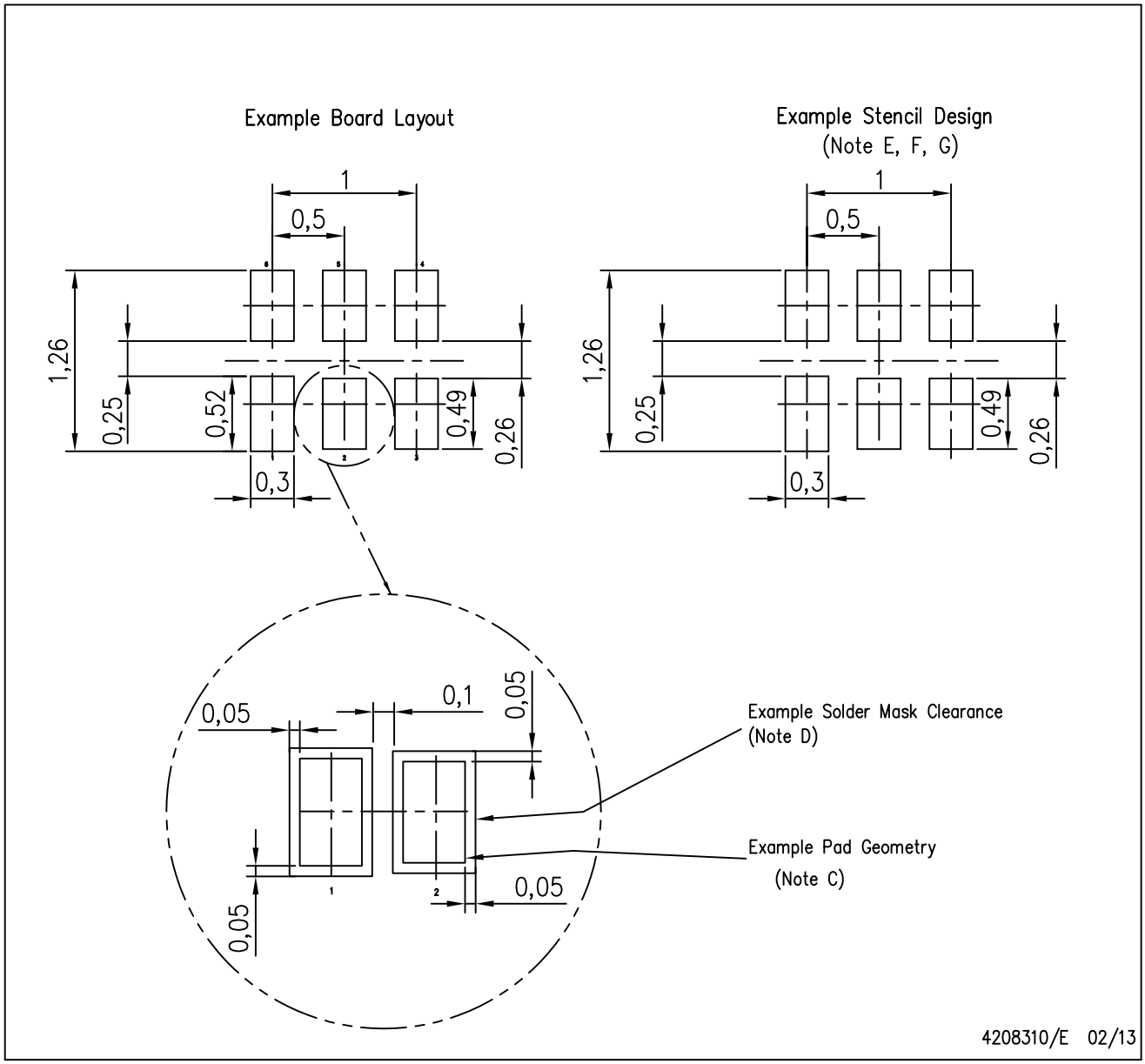

NOTES:
A. All linear dimensions are in millimeters.
B. This drawing is subject to change without notice.
C. Publication IPC–7351 is recommended for alternate designs.
D. Customers should contact their board fabrication site for minimum solder mask web tolerances between signal pads.
E. Maximum stencil thickness 0,127 mm (5 mils). All linear dimensions are in millimeters.
F. Laser cutting apertures with trapezoidal walls and also rounding corners will offer better paste release. Customers should contact their board assembly site for stencil design recommendations. Refer to IPC 7525 for stencil design considerations.
G. Side aperture dimensions over–print land for acceptable area ratio > 0.66. Customer may reduce side aperture dimensions if stencil manufacturing process allows for sufficient release at smaller opening.

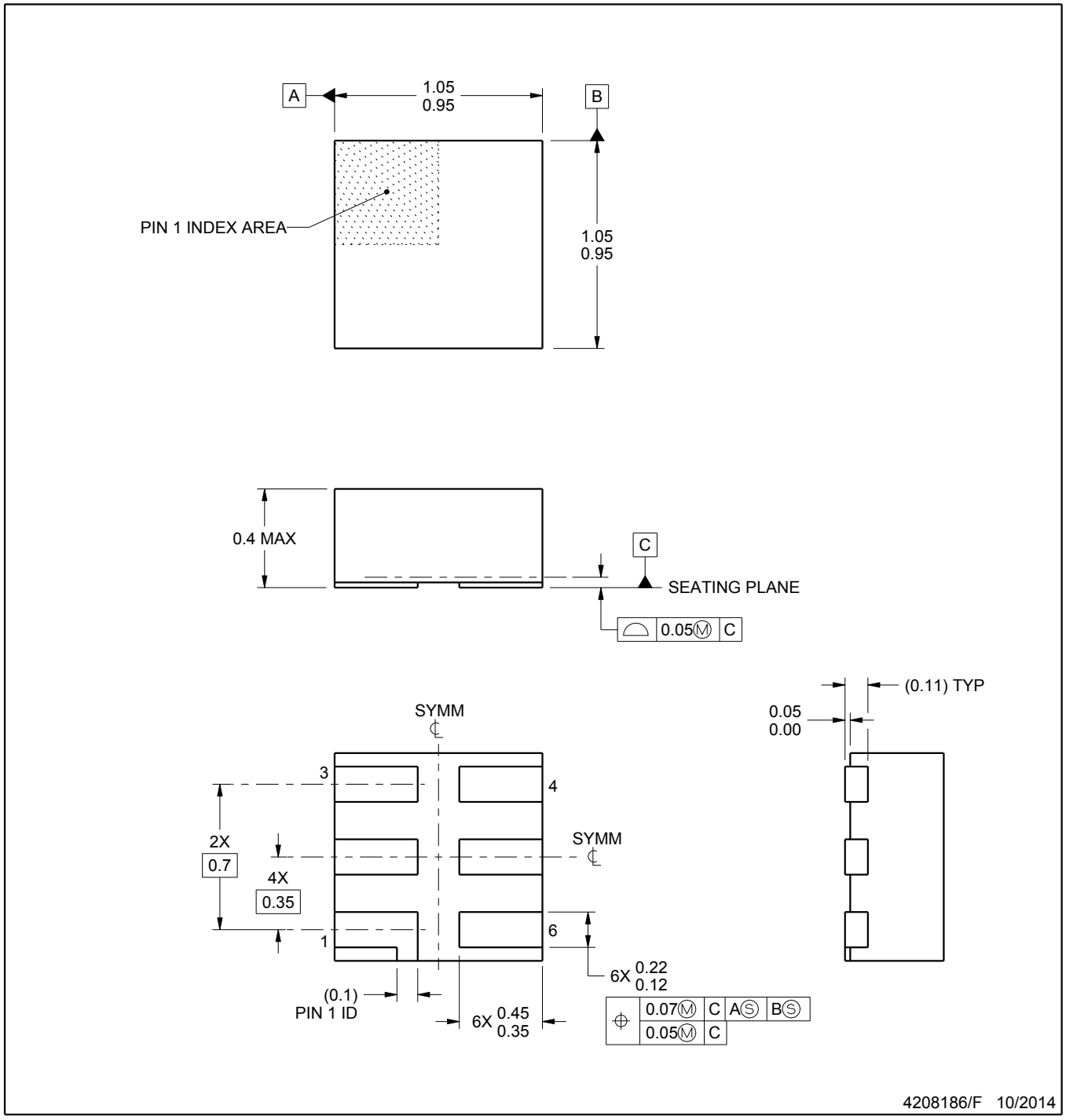

NOTES:

1. All linear dimensions are in millimeters. Any dimensions in parenthesis are for reference only. Dimensioning and tolerancing per ASME Y14.5M.
2. This drawing is subject to change without notice.
3. Reference JEDEC registration MO-287, variation X2AAF.

DSF (S–PX2SON–N6) PLASTIC SMALL OUTLINE NO–LEAD

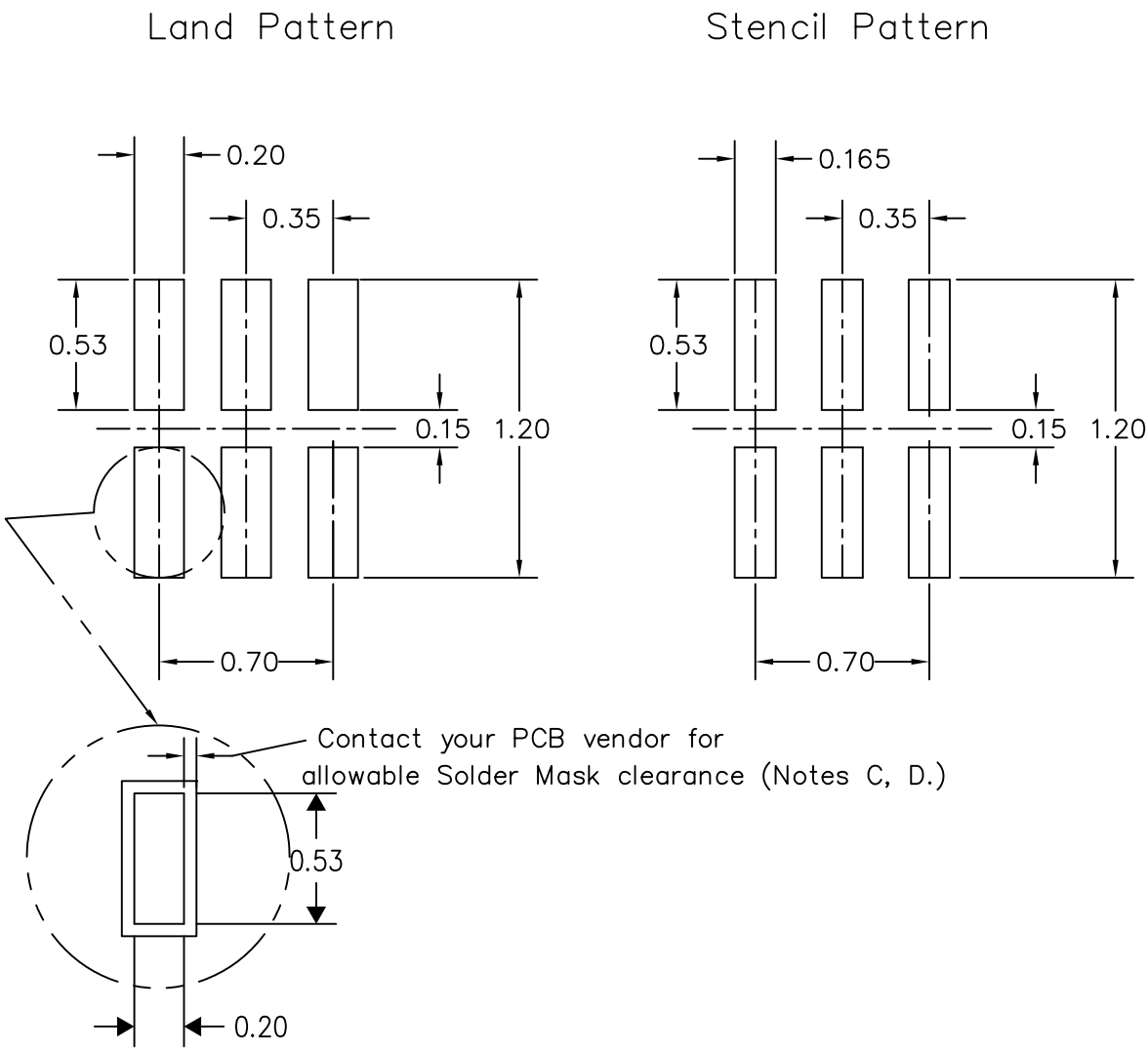

4210277/D 05/12

NOTES:
A. All linear dimensions are in millimeters.
B. This drawing is subject to change without notice.
C. Publication IPC–7351 is recommended for alternate designs.
D. Customers should contact their board fabrication site for minimum solder mask web tolerances between signal pads. If 2 mil solder mask is outside PCB vendor capability, it is advised to omit solder mask.
E. Maximum stencil thickness 0,1016 mm (4 mils). All linear dimensions are in millimeters.
F. Laser cutting apertures with trapezoidal walls and also rounding corners will offer better paste release. Customers should contact their board assembly site for stencil design recommendations. Refer to IPC 7525 for stencil design considerations.
G. Suggest stencils cut with lasers such as Fiber Laser that produce the greatest positional accuracy.
H. Component placement force should be minimized to prevent excessive paste block deformation.

DPK (S-PUSON-N5) PLASTIC SMALL OUTLINE NO-LEAD

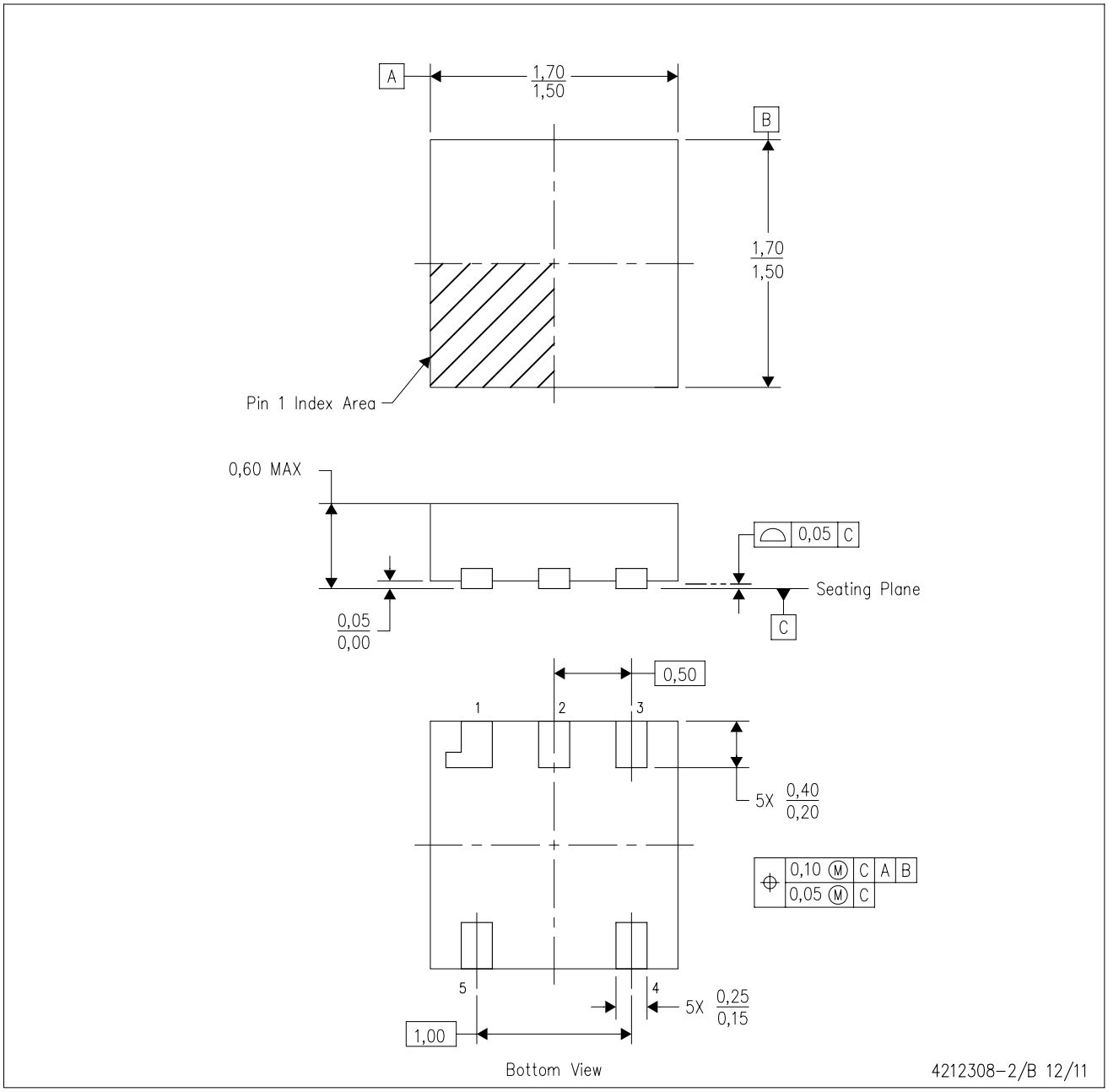

NOTES: A. All linear dimensions are in millimeters. Dimensioning and tolerancing per ASME Y14.5M-1994.
B. This drawing is subject to change without notice.

YEA (R–XBGA–N5) DIE–SIZE BALL GRID ARRAY

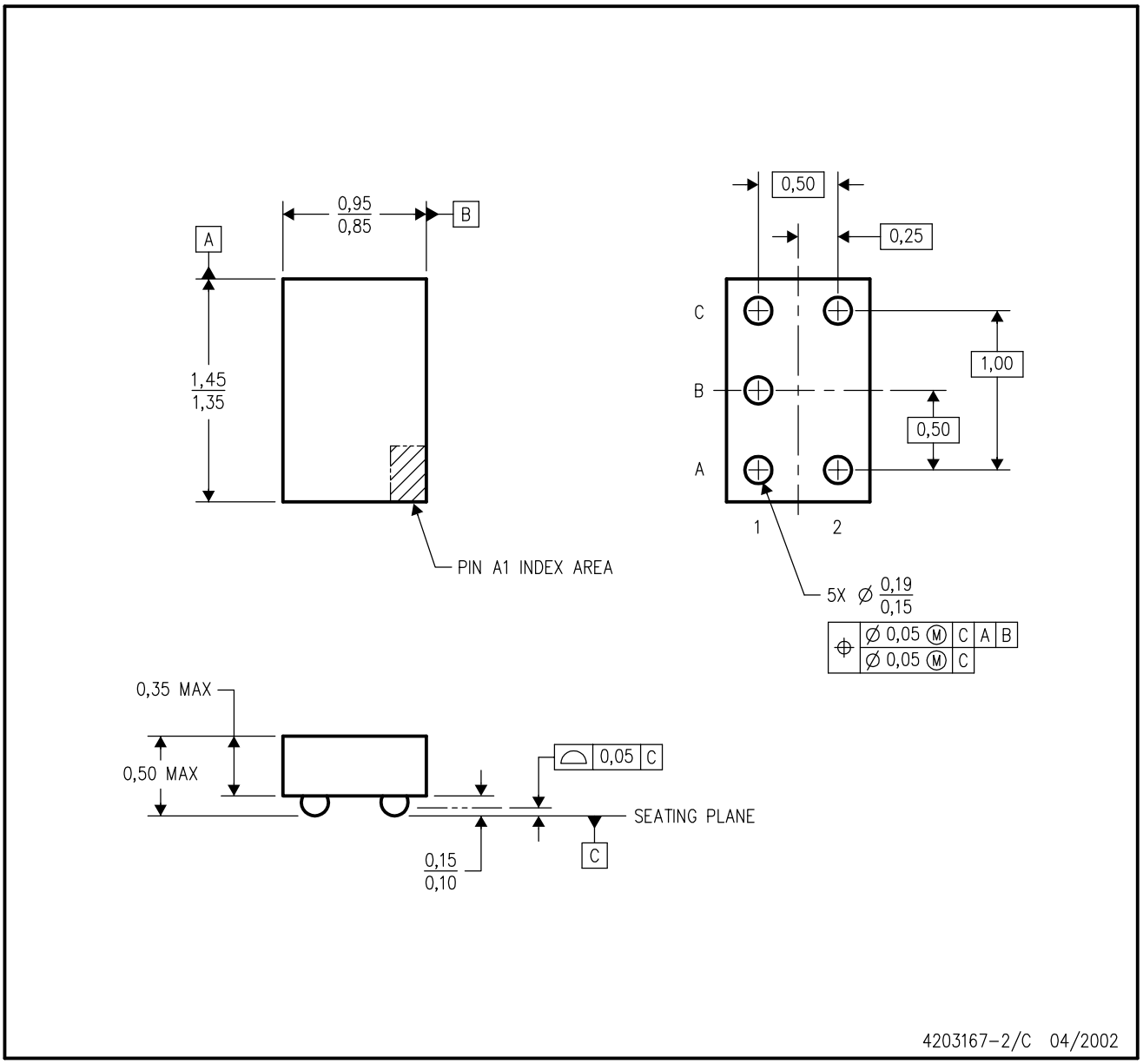

NOTES:
A. All linear dimensions are in millimeters.
B. This drawing is subject to change without notice.
C. NanoStar™ package configuration.
D. Package complies to JEDEC MO–211 variation EA.
E. This package is tin–lead (SnPb). Refer to the 5 YZA package (drawing 4204151) for lead–free.

NanoStar is a trademark of Texas Instruments.

YZA (R–XBGA–N5) DIE–SIZE BALL GRID ARRAY

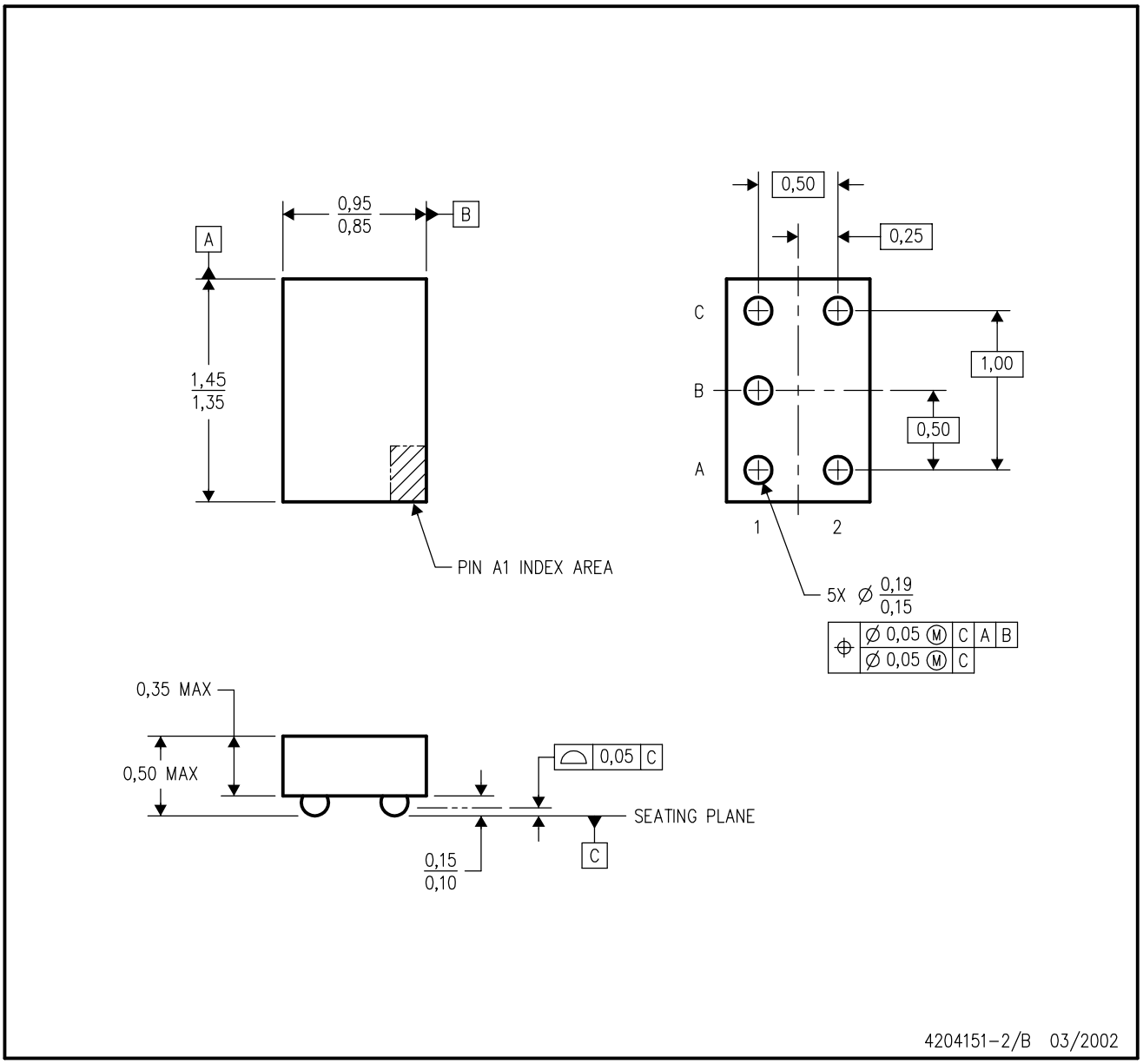

NOTES:
A. All linear dimensions are in millimeters.
B. This drawing is subject to change without notice.
C. NanoFree™ package configuration.
D. Package complies to JEDEC MO–211 variation EA.
E. This package is lead–free. Refer to the 5 YEA package (drawing 4203167) for tin–lead (SnPb).

NanoFree is a trademark of Texas Instruments.

YZP (R–XBGA–N5) DIE–SIZE BALL GRID ARRAY

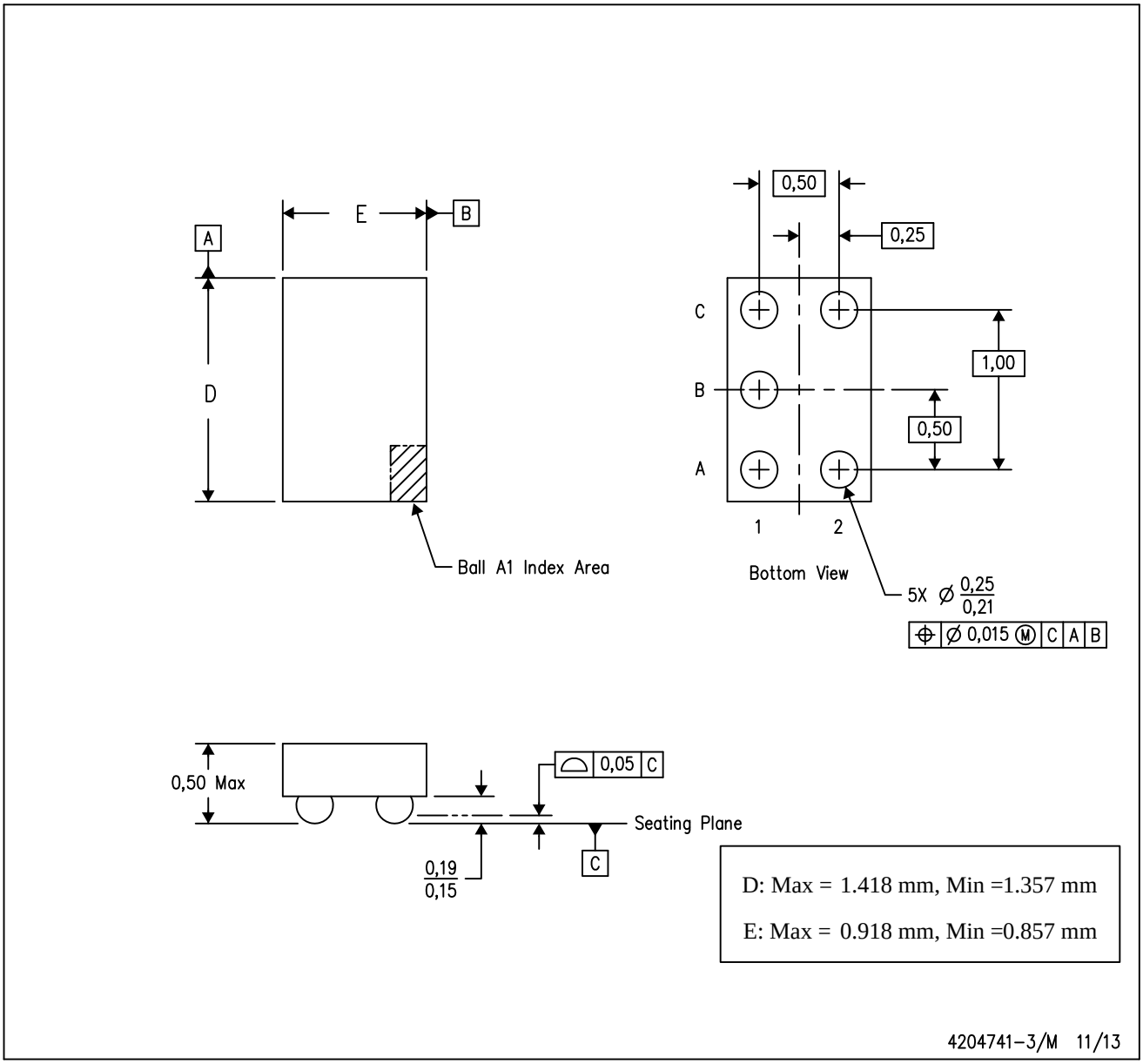

NOTES:
A. All linear dimensions are in millimeters. Dimensioning and tolerancing per ASME Y14.5M–1994.
B. This drawing is subject to change without notice.
C. NanoFree™ package configuration.

NanoFree is a trademark of Texas Instruments.

YEP (R–XBGA–N5) DIE–SIZE BALL GRID ARRAY

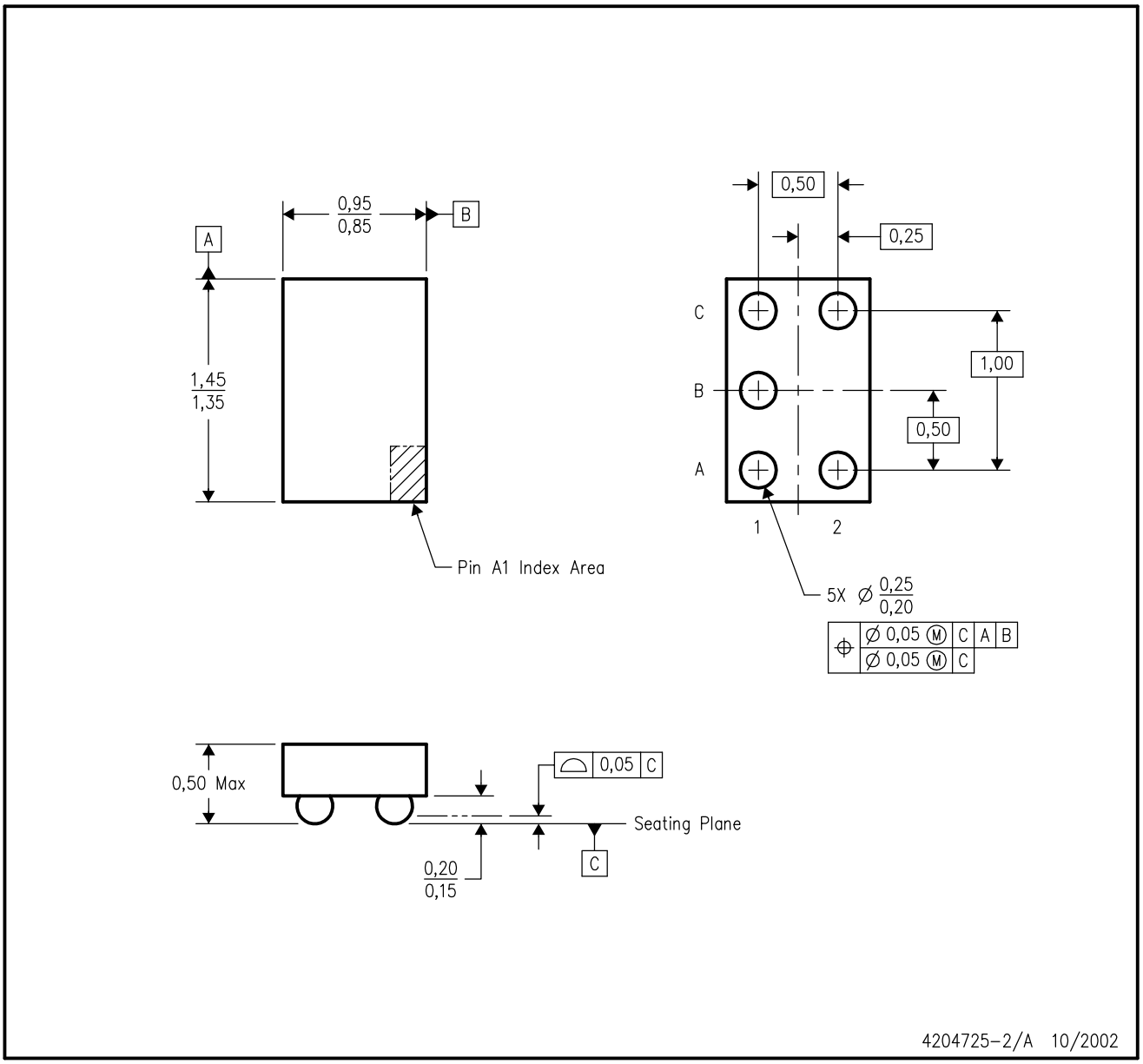

NOTES:
A. All linear dimensions are in millimeters.
B. This drawing is subject to change without notice.
C. NanoStar™ package configuration.
D. This package is tin–lead (SnPb). Refer to the 5 YZP package (drawing 4204741) for lead–free.

NanoStar is a trademark of Texas Instruments.

YZT (S-XBGA-N4) DIE-SIZE BALL GRID ARRAY

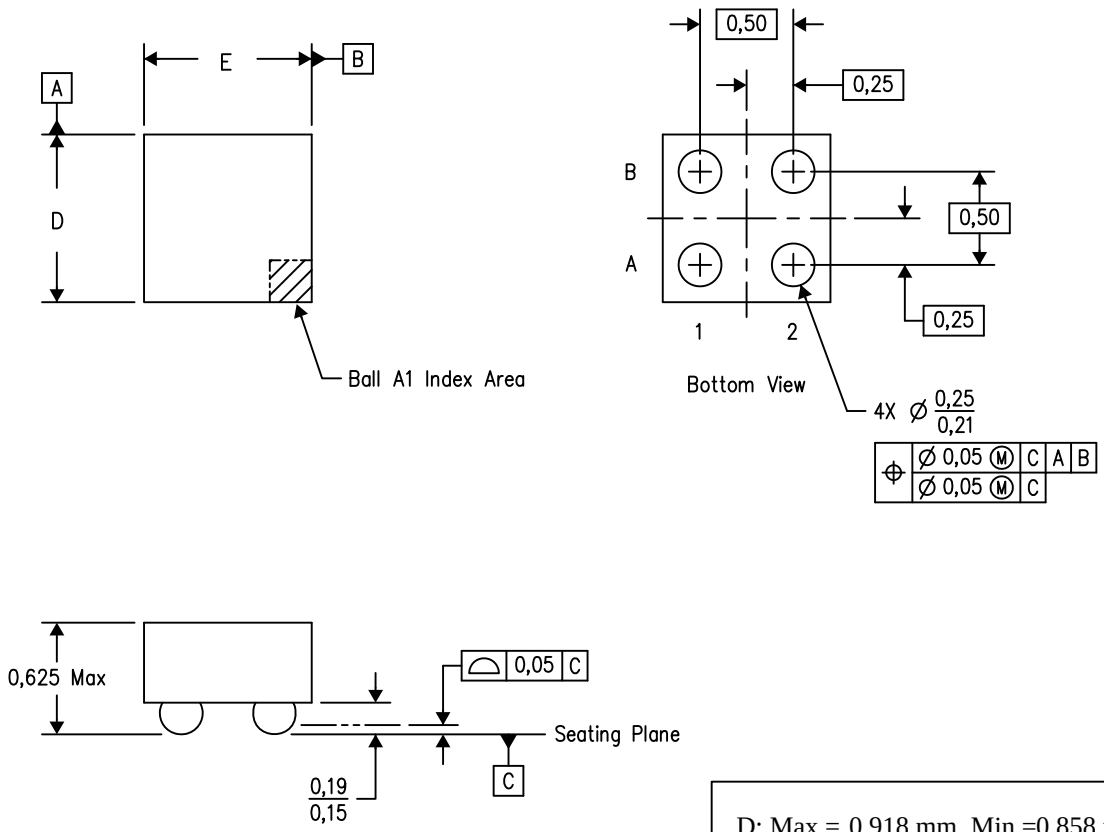

NOTES:
A. All linear dimensions are in millimeters. Dimensioning and tolerancing per ASME Y14.5M-1994.
B. This drawing is subject to change without notice.
C. NanoFree™ package configuration.

NanoFree is a trademark of Texas Instruments.

YZV (S-XBGA-N4) DIE-SIZE BALL GRID ARRAY

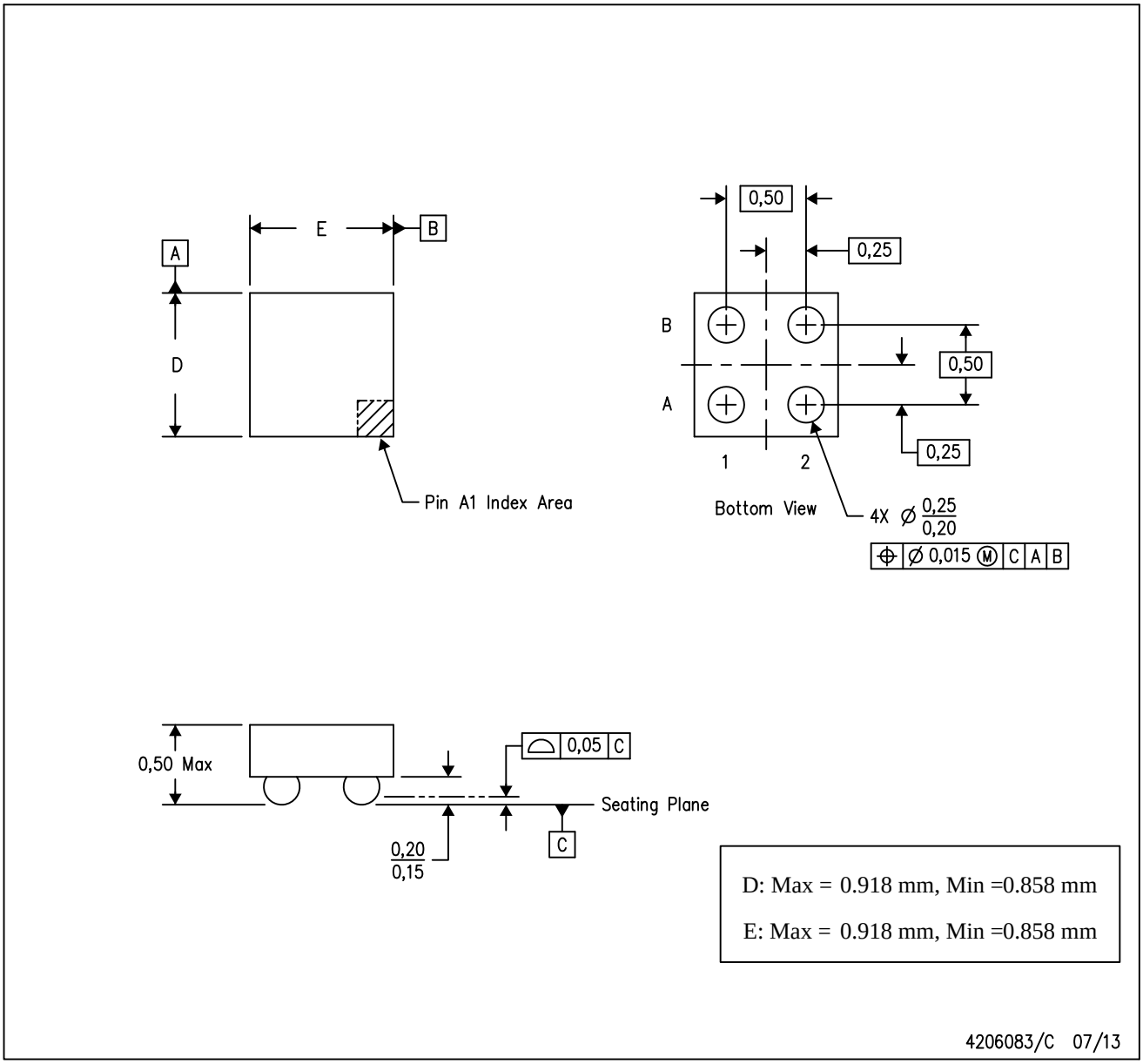

NOTES:
A. All linear dimensions are in millimeters. Dimensioning and tolerancing per ASME Y14.5M-1994.
B. This drawing is subject to change without notice.
C. NanoFree™ package configuration.

NanoFree is a trademark of Texas Instruments.

IMPORTANT NOTICE

Texas Instruments Incorporated and its subsidiaries (TI) reserve the right to make corrections, enhancements, improvements and other changes to its semiconductor products and services per JESD46, latest issue, and to discontinue any product or service per JESD48, latest issue. Buyers should obtain the latest relevant information before placing orders and should verify that such information is current and complete. All semiconductor products (also referred to herein as “components”) are sold subject to TI’s terms and conditions of sale supplied at the time of order acknowledgment.

TI warrants performance of its components to the specifications applicable at the time of sale, in accordance with the warranty in TI’s terms and conditions of sale of semiconductor products. Testing and other quality control techniques are used to the extent TI deems necessary to support this warranty. Except where mandated by applicable law, testing of all parameters of each component is not necessarily performed.

TI assumes no liability for applications assistance or the design of Buyers’ products. Buyers are responsible for their products and applications using TI components. To minimize the risks associated with Buyers’ products and applications, Buyers should provide adequate design and operating safeguards.

TI does not warrant or represent that any license, either express or implied, is granted under any patent right, copyright, mask work right, or other intellectual property right relating to any combination, machine, or process in which TI components or services are used. Information published by TI regarding third-party products or services does not constitute a license to use such products or services or a warranty or endorsement thereof. Use of such information may require a license from a third party under the patents or other intellectual property of the third party, or a license from TI under the patents or other intellectual property of TI.

Reproduction of significant portions of TI information in TI data books or data sheets is permissible only if reproduction is without alteration and is accompanied by all associated warranties, conditions, limitations, and notices. TI is not responsible or liable for such altered documentation. Information of third parties may be subject to additional restrictions.

Resale of TI components or services with statements different from or beyond the parameters stated by TI for that component or service voids all express and any implied warranties for the associated TI component or service and is an unfair and deceptive business practice. TI is not responsible or liable for any such statements.

Buyer acknowledges and agrees that it is solely responsible for compliance with all legal, regulatory and safety-related requirements concerning its products, and any use of TI components in its applications, notwithstanding any applications-related information or support that may be provided by TI. Buyer represents and agrees that it has all the necessary expertise to create and implement safeguards which anticipate dangerous consequences of failures, monitor failures and their consequences, lessen the likelihood of failures that might cause harm and take appropriate remedial actions. Buyer will fully indemnify TI and its representatives against any damages arising out of the use of any TI components in safety-critical applications.

In some cases, TI components may be promoted specifically to facilitate safety-related applications. With such components, TI’s goal is to help enable customers to design and create their own end-product solutions that meet applicable functional safety standards and requirements. Nonetheless, such components are subject to these terms.

No TI components are authorized for use in FDA Class III (or similar life-critical medical equipment) unless authorized officers of the parties have executed a special agreement specifically governing such use.

Only those TI components which TI has specifically designated as military grade or “enhanced plastic” are designed and intended for use in military/aerospace applications or environments. Buyer acknowledges and agrees that any military or aerospace use of TI components which have ***not*** been so designated is solely at the Buyer's risk, and that Buyer is solely responsible for compliance with all legal and regulatory requirements in connection with such use.

TI has specifically designated certain components as meeting ISO/TS16949 requirements, mainly for automotive use. In any case of use of non-designated products, TI will not be responsible for any failure to meet ISO/TS16949.

Products		**Applications**	
Audio	www.ti.com/audio	Automotive and Transportation	www.ti.com/automotive
Amplifiers	amplifier.ti.com	Communications and Telecom	www.ti.com/communications
Data Converters	dataconverter.ti.com	Computers and Peripherals	www.ti.com/computers
DLP® Products	www.dlp.com	Consumer Electronics	www.ti.com/consumer-apps
DSP	dsp.ti.com	Energy and Lighting	www.ti.com/energy
Clocks and Timers	www.ti.com/clocks	Industrial	www.ti.com/industrial
Interface	interface.ti.com	Medical	www.ti.com/medical
Logic	logic.ti.com	Security	www.ti.com/security
Power Mgmt	power.ti.com	Space, Avionics and Defense	www.ti.com/space-avionics-defense
Microcontrollers	microcontroller.ti.com	Video and Imaging	www.ti.com/video
RFID	www.ti-rfid.com		
OMAP Applications Processors	www.ti.com/omap	**TI E2E Community**	e2e.ti.com
Wireless Connectivity	www.ti.com/wirelessconnectivity		

Mailing Address: Texas Instruments, Post Office Box 655303, Dallas, Texas 75265
Copyright © 2015, Texas Instruments Incorporated