features

- Inverts Input Supply Voltage
- Up to 60-mA Output Current
- Only Three Small 1-μF Ceramic Capacitors Needed
- Input Voltage Range From 1.6 V to 5.5 V
- PowerSave-Mode for Improved Efficiency at Low Output Currents (TPS60400)
- Device Quiescent Current Typical 65 μA
- Integrated Active Schottky-Diode for Start-Up Into Load
- Small 5-Pin SOT23 Package
- Evaluation Module Available TPS60400EVM−178

applications

- LCD Bias
- GaAs Bias for RF Power Amps
- Sensor Supply in Portable Instruments
- Bipolar Amplifier Supply
- Medical Instruments
- Battery-Operated Equipment

DBV PACKAGE
(TOP VIEW)

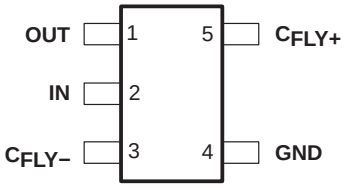

description

The TPS6040x is a family of devices that generate an unregulated negative output voltage from an input voltage ranging from 1.6 V to 5.5 V. The devices are typically supplied by a preregulated supply rail of 5 V or 3.3 V. Due to its wide input voltage range, two or three NiCd, NiMH, or alkaline battery cells, as well as one Li-Ion cell can also power them.

Only three external 1-μF capacitors are required to build a complete dc/dc charge pump inverter. Assembled in a 5-pin SOT23 package, the complete converter can be built on a 50 mm^2 board area. Additional board area and component count reduction is achieved by replacing the Schottky diode that is typically needed for start-up into load by integrated circuitry.

The TPS6040x can deliver a maximum output current of 60 mA with a typical conversion efficiency of greater than 90% over a wide output current range. Three device options with 20-kHz, 50-kHz, and 250-kHz fixed frequency operation are available. One device comes with a variable switching frequency to reduce operating current in applications with a wide load range and enables the design with low-value capacitors.

typical application circuit

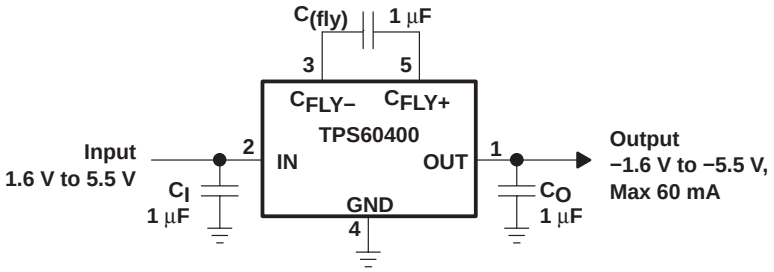

TPS60400
OUTPUT VOLTAGE
vs
INPUT VOLTAGE

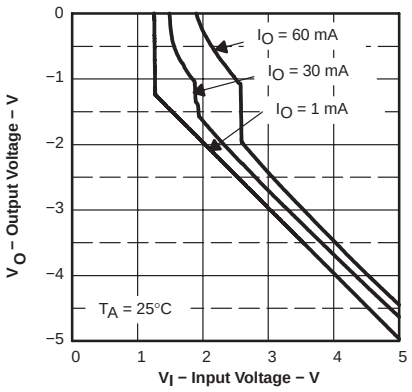

Please be aware that an important notice concerning availability, standard warranty, and use in critical applications of Texas Instruments semiconductor products and disclaimers thereto appears at the end of this data sheet.

PRODUCTION DATA information is current as of publication date. Products conform to specifications per the terms of Texas Instruments standard warranty. Production processing does not necessarily include testing of all parameters.

Copyright © 2001−2004, Texas Instruments Incorporated

AVAILABLE OPTIONS

PART NUMBER†	MARKING DBV PACKAGE	TYPICAL FLYING CAPACITOR [μF]	FEATURE
TPS60400DBV	PFKI	1	Variable switching frequency 50 kHz−250 kHz
TPS60401DBV	PFLI	10	Fixed frequency 20 kHz
TPS60402DBV	PFMI	3.3	Fixed frequency 50 kHz
TPS60403DBV	PFNI	1	Fixed frequency 250 kHz

† The DBV package is available taped and reeled. Add R suffix to device type (e.g. TPS60400DBVR) to order quantities of 3000 devices per reel. Add T suffix to device type (e.g. TPS60400DBVT) to order quantities of 250 devices per reel.

TPS60400 functional block diagram

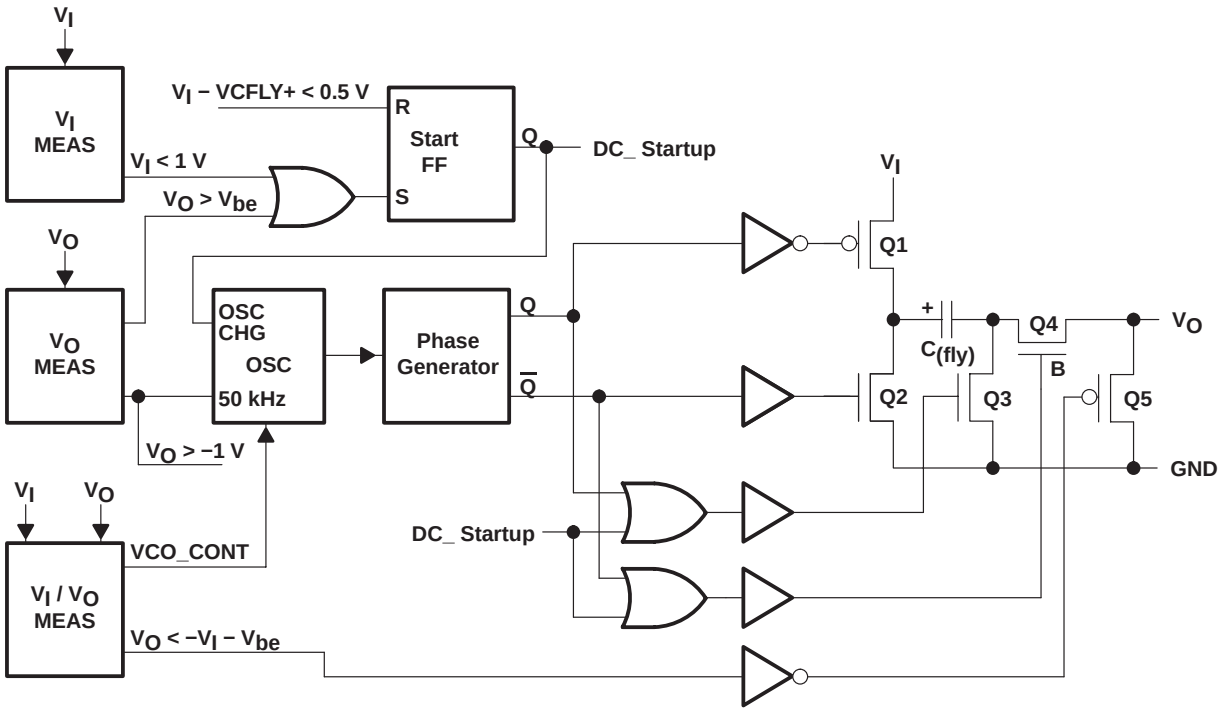

Terminal Functions

TERMINAL NAME	TERMINAL NO.	I/O	DESCRIPTION
C_{FLY+}	5		Positive terminal of the flying capacitor $C_{(fly)}$
C_{FLY-}	3		Negative terminal of the flying capacitor $C_{(fly)}$
GND	4		Ground
IN	2	I	Supply input. Connect to an input supply in the 1.6-V to 5.5-V range. Bypass IN to GND with a capacitor that has the same value as the flying capacitor.
OUT	1	O	Power output with $V_O = -V_I$ Bypass OUT to GND with the output filter capacitor C_O.

detailed description

operating principle

The TPS60400, TPS60401 charge pumps invert the voltage applied to their input. For the highest performance, use low equivalent series resistance (ESR) capacitors (e.g., ceramic). During the first half-cycle, switches S2 and S4 open, switches S1 and S3 close, and capacitor ($C_{(fly)}$) charges to the voltage at V_I. During the second half-cycle, S1 and S3 open, S2 and S4 close. This connects the positive terminal of $C_{(fly)}$ to GND and the negative to V_O. By connecting $C_{(fly)}$ in parallel, C_O is charged negative. The actual voltage at the output is more positive than $-V_I$, since switches S1–S4 have resistance and the load drains charge from C_O.

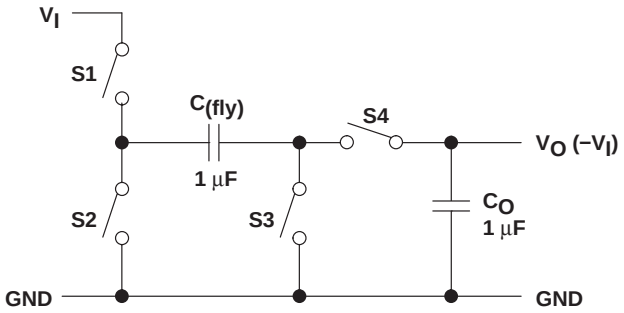

Figure 1. Operating Principle

charge-pump output resistance

The TPS6040x devices are not voltage regulators. The charge pumps output source resistance is approximately 15 Ω at room temperature (with V_I = 5 V), and V_O approaches –5 V when lightly loaded. V_O will droop toward GND as load current increases.

$$V_O = -(V_I - R_O \times I_O)$$

$$R_O \approx \frac{1}{f\text{osc} \times C_{(fly)}} + 4\left(2R_{SWITCH} + ESR_{CFLY}\right) + ESR_{CO} \quad (1)$$

R_O = output resistance of the converter

efficiency considerations

The power efficiency of a switched-capacitor voltage converter is affected by three factors: the internal losses in the converter IC, the resistive losses of the capacitors, and the conversion losses during charge transfer between the capacitors. The internal losses are associated with the IC's internal functions, such as driving the switches, oscillator, etc. These losses are affected by operating conditions such as input voltage, temperature, and frequency. The next two losses are associated with the voltage converter circuit's output resistance. Switch losses occur because of the on-resistance of the MOSFET switches in the IC. Charge-pump capacitor losses occur because of their ESR. The relationship between these losses and the output resistance is as follows:

$$P_{CAPACITOR\ LOSSES} + P_{CONVERSION\ LOSSES} = I_O^2 \times R_O$$

R_{SWITCH} = resistance of a single MOSFET-switch inside the converter
f_{OSC} = oscillator frequency

The first term is the effective resistance from an ideal switched-capacitor circuit. Conversion losses occur during the charge transfer between $C_{(fly)}$ and C_O when there is a voltage difference between them. The power loss is:

$$P_{CONV.LOSS} = \left[\frac{1}{2} \times C_{(fly)}\left(V_I^2 - V_O^2\right) + \frac{1}{2}C_O\left(V_{RIPPLE}^2 - 2V_O V_{RIPPLE}\right)\right] \times f_{osc} \quad (2)$$

efficiency considerations (continued)

The efficiency of the TPS6040x devices is dominated by their quiescent supply current at low output current and by their output impedance at higher current.

$$\eta \cong \frac{I_O}{I_O + I_Q}\left(1 - \frac{I_O \times R_O}{V_I}\right)$$

Where, I_Q = quiescent current.

capacitor selection

To maintain the lowest output resistance, use capacitors with low ESR (see Table 1). The charge-pump output resistance is a function of $C_{(fly)}$'s and C_O's ESR. Therefore, minimizing the charge-pump capacitor's ESR minimizes the total output resistance. The capacitor values are closely linked to the required output current and the output noise and ripple requirements. It is possible to only use 1-µF capacitors of the same type.

input capacitor (C_I)

Bypass the incoming supply to reduce its ac impedance and the impact of the TPS6040x switching noise. The recommended bypassing depends on the circuit configuration and where the load is connected. When the inverter is loaded from OUT to GND, current from the supply switches between 2 x I_O and zero. Therefore, use a large bypass capacitor (e.g., equal to the value of $C_{(fly)}$) if the supply has high ac impedance.

flying capacitor ($C_{(fly)}$)

Increasing the flying capacitor's size reduces the output resistance. Small values increases the output resistance. Above a certain point, increasing $C_{(fly)}$'s capacitance has a negligible effect, because the output resistance becomes dominated by the internal switch resistance and capacitor ESR.

output capacitor (C_O)

Increasing the output capacitor's size reduces the output ripple voltage. Decreasing its ESR reduces both output resistance and ripple. Smaller capacitance values can be used with light loads if higher output ripple can be tolerated. Use the following equation to calculate the peak-to-peak ripple.

$$V_{O(ripple)} = \frac{I_O}{f_{osc} \times C_o} + 2 \times I_O \times ESR_{CO}$$

Table 1. Recommended Capacitor Values

DEVICE	V_I [V]	I_O [mA]	C_I [µF]	$C_{(fly)}$ [µF]	C_O [µF]
TPS60400	1.8…5.5	60	1	1	1
TPS60401	1.8…5.5	60	10	10	10
TPS60402	1.8…5.5	60	3.3	3.3	3.3
TPS60403	1.8…5.5	60	1	1	1

detailed description (continued)

Table 2. Recommended Capacitors

MANUFACTURER	PART NUMBER	SIZE	CAPACITANCE	TYPE
Taiyo Yuden	EMK212BJ474MG	0805	0.47 µF	Ceramic
	LMK212BJ105KG	0805	1 µF	Ceramic
	LMK212BJ225MG	0805	2.2 µF	Ceramic
	EMK316BJ225KL	1206	2.2 µF	Ceramic
	LMK316BJ475KL	1206	4.7 µF	Ceramic
	JMK316BJ106KL	1206	10 µF	Ceramic
TDK	C2012X5R1C105M	0805	1 µF	Ceramic
	C2012X5R1A225M	0805	2.2 µF	Ceramic
	C2012X5R1A335M	0805	3.3 µF	Ceramic

Table 3 contains a list of manufacturers of the recommended capacitors. Ceramic capacitors will provide the lowest output voltage ripple because they typically have the lowest ESR-rating.

Table 3. Recommended Capacitor Manufacturers

MANUFACTURER	CAPACITOR TYPE	INTERNET
Taiyo Yuden	X7R/X5R ceramic	www.t-yuden.com
TDK	X7R/X5R ceramic	www.component.tdk.com
Vishay	X7R/X5R ceramic	www.vishay.com
Kemet	X7R/X5R ceramic	www.kemet.com

absolute maximum ratings over operating free-air temperature (unless otherwise noted)†

Voltage range: IN to GND . . . . . −0.3 V to 5.5 V
OUT to GND . . . . . −5.5 V to 0.3 V
C_{FLY-} to GND . . . . . 0.3 V to (V_O − 0.3 V)
C_{FLY+} to GND . . . . . −0.3 V to (V_I + 0.3 V)
Continuous power dissipation . . . . . See Dissipation Rating Table
Continuous output current . . . . . 80 mA
Storage temperature range, T_{stg} . . . . . −55°C to 150°C
Maximum junction temperature, T_J . . . . . 150°C

† Stresses beyond those listed under “absolute maximum ratings” may cause permanent damage to the device. These are stress ratings only, and functional operation of the device at these or any other conditions beyond those indicated under “recommended operating conditions” is not implied. Exposure to absolute-maximum-rated conditions for extended periods may affect device reliability.

DISSIPATION RATING TABLE

PACKAGE	T_A < 25°C POWER RATING	DERATING FACTOR ABOVE T_A = 25°C	T_A = 70°C POWER RATING	T_A = 85°C POWER RATING
DBV	437 mW	3.5 mW/°C	280 mW	227 mW

recommended operating conditions

	MIN	NOM	MAX	UNIT
Input voltage range, V_I	1.8		5.25	V
Output current range at OUT, I_O			60	mA
Input capacitor, C_I	0	$C_{(fly)}$		µF
Flying capacitor, $C_{(fly)}$		1		µF
Output capacitor, C_O		1	100	µF
Operating junction temperature, T_J	−40		125	°C

electrical characteristics at $C_I = C_{(fly)} = C_O$ (according to Table 1), T_C = −40°C to 85°C, V_I = 5 V over recommended operating free-air temperature range (unless otherwise noted)

PARAMETER			TEST CONDITIONS		MIN	TYP	MAX	UNIT
V_I	Supply voltage range		At T_C = −40°C to 85°C, R_L = 5 kΩ		1.8		5.25	V
			At $T_C \geq$ 0°C, R_L = 5 kΩ		1.6			
I_O	Maximum output current at V_O				60			mA
V_O	Output voltage					$-V_I$		V
V_{P-P}	Output voltage ripple	TPS60400	I_O = 5 mA	$C_{(fly)}$ = 1 µF, C_O = 2.2 µF		35		mV_{P-P}
		TPS60401		$C_{(fly)} = C_O$ = 10 µF		20		
		TPS60402		$C_{(fly)} = C_O$ = 3.3 µF		20		
		TPS60403		$C_{(fly)} = C_O$ = 1 µF		15		
I_Q	Quiescent current (no-load input current)	TPS60400	At V_I = 5 V			125	270	µA
		TPS60401				65	190	
		TPS60402				120	270	
		TPS60403				425	700	
		TPS60400	At T ≤ 60°C, V_I = 5 V				210	µA
		TPS60401					135	
		TPS60402					210	
		TPS60403					640	
f_{OSC}	Internal switching frequency	TPS60400	VCO version		30	50−250	350	kHz
		TPS60401			13	20	28	
		TPS60402			30	50	70	
		TPS60403			150	250	300	
	Impedance at 25°C, V_I = 5 V	TPS60400	$C_I = C_{(fly)} = C_O$ = 1 µF			12	15	Ω
		TPS60401	$C_I = C_{(fly)} = C_O$ = 10 µF			12	15	
		TPS60402	$C_I = C_{(fly)} = C_O$ = 3.3 µF			12	15	
		TPS60403	$C_I = C_{(fly)} = C_O$ = 1 µF			12	15	

TYPICAL CHARACTERISTICS

Table of Graphs

			FIGURE
η	Efficiency	vs Output current at 3.3 V, 5 V TPS60400, TPS60401, TPS60402, TPS60403	2, 3
I_I	Input current	vs Output current TPS60400, TPS60401, TPS60402, TPS60403	4, 5
I_S	Supply current	vs Input voltage TPS60400, TPS60401, TPS60402, TPS60403	6, 7
	Output resistance	vs Input voltage at −40°C, 0°C, 25°C, 85°C TPS60400, $C_I = C_{(fly)} = C_O = 1\ \mu F$ TPS60401, $C_I = C_{(fly)} = C_O = 10\ \mu F$ TPS60402 , $C_I = C_{(fly)} = C_O = 3.3\ \mu F$ TPS60403, $C_I = C_{(fly)} = C_O = 1\ \mu F$	8, 9, 10, 11
V_O	Output voltage	vs Output current at 25°C, V_{IN}=1.8 V, 2.5 V, 3.3 V, 5 V TPS60400, $C_I = C_{(fly)} = C_O = 1\ \mu F$ TPS60401, $C_I = C_{(fly)} = C_O = 10\ \mu F$ TPS60402 , $C_I = C_{(fly)} = C_O = 3.3\ \mu F$ TPS60403, $C_I = C_{(fly)} = C_O = 1\ \mu F$	12, 13, 14, 15
f_{OSC}	Oscillator frequency	vs Temperature at V_I = 1.8 V, 2.5 V, 3.3 V, 5 V TPS60400, TPS60401, TPS60402, TPS60403	16, 17, 18, 19
f_{OSC}	Oscillator frequency	vs Output current TPS60400 at 2 V, 3.3 V, 5.0 V	20
	Output ripple and noise	V_I = 5 V, I_O = 30 mA, $C_I = C_{(fly)} = C_O = 1\ \mu F$ (TPS60400) V_I = 5 V, I_O = 30 mA, $C_I = C_{(fly)} = C_O = 10\ \mu F$ (TPS60401) V_I = 5 V, I_O = 30 mA, $C_I = C_{(fly)} = C_O = 3.3\ \mu F$ (TPS60402) V_I = 5 V, I_O = 30 mA, $C_I = C_{(fly)} = C_O = 1\ \mu F$ (TPS60403)	21, 22

TPS60400, TPS60401
EFFICIENCY
vs
OUTPUT CURRENT

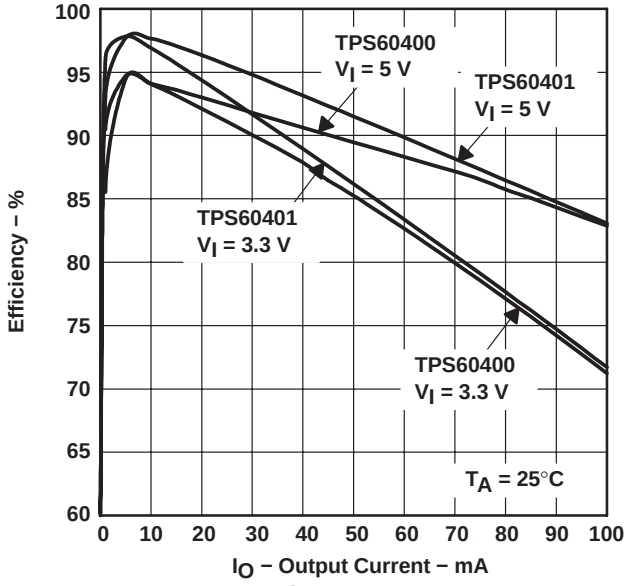

Figure 2

TPS60402, TPS60403
EFFICIENCY
vs
OUTPUT CURRENT

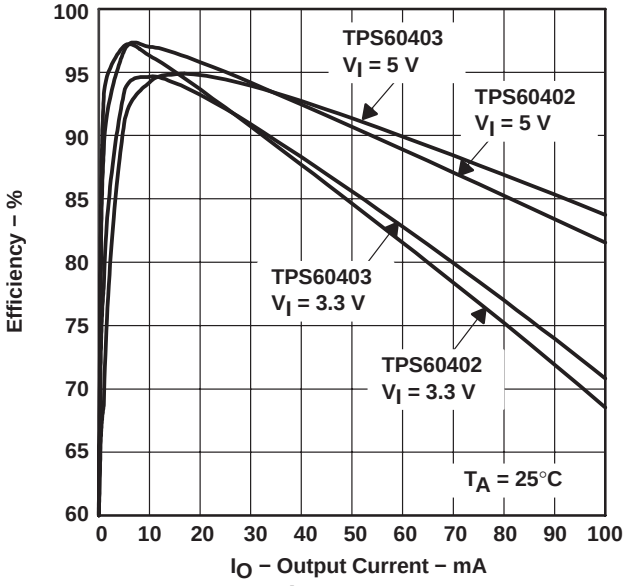

Figure 3

TYPICAL CHARACTERISTICS

**TPS60400, TPS60401
INPUT CURRENT
vs
OUTPUT CURRENT**

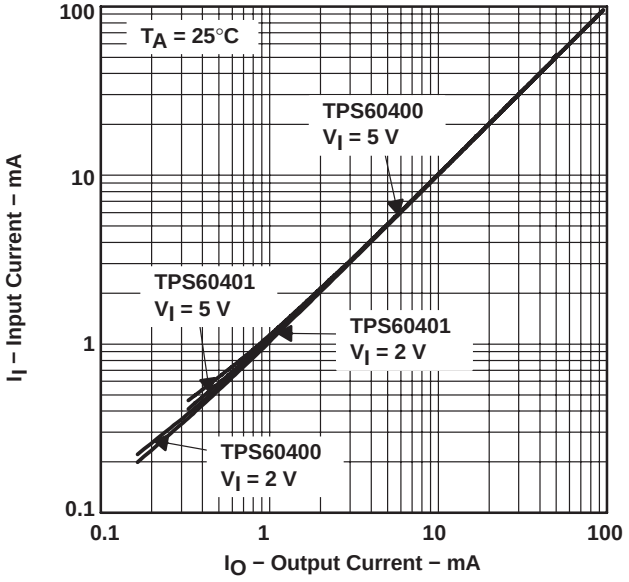

Figure 4

**TPS60402, TPS60403
INPUT CURRENT
vs
OUTPUT CURRENT**

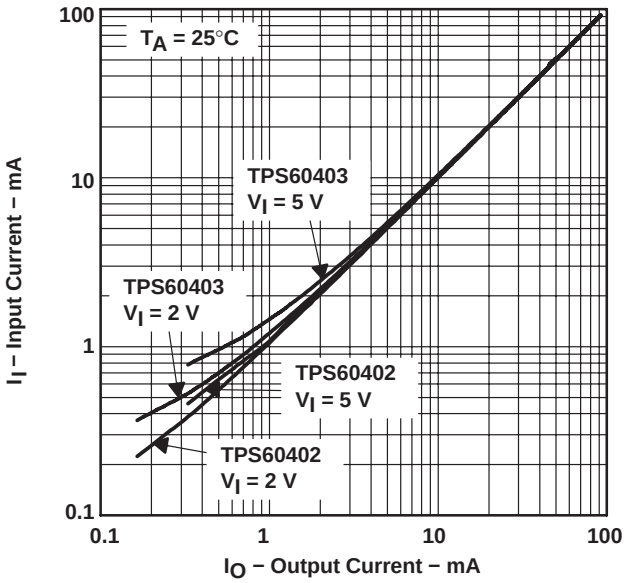

Figure 5

**TPS60400, TPS60401
SUPPLY CURRENT
vs
INPUT VOLTAGE**

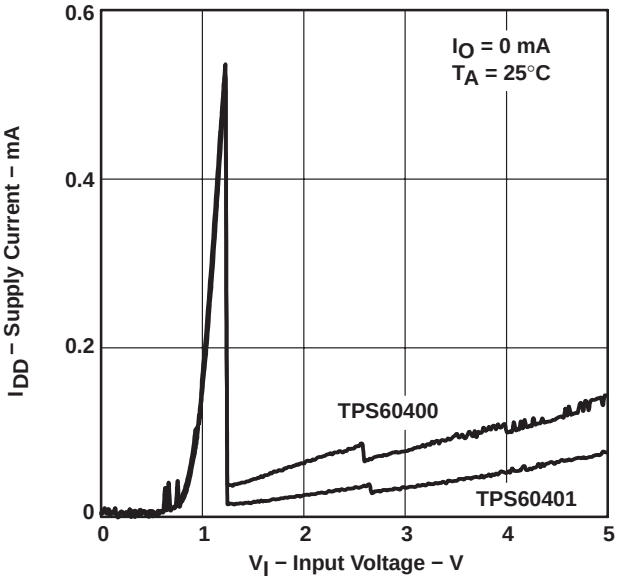

Figure 6

**TPS60402, TPS60403
SUPPLY CURRENT
vs
INPUT VOLTAGE**

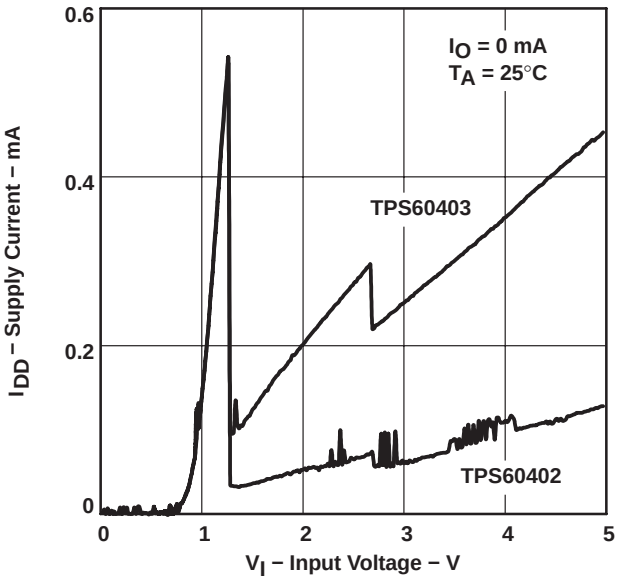

Figure 7

TYPICAL CHARACTERISTICS

TPS60400
OUTPUT RESISTANCE
vs
INPUT VOLTAGE

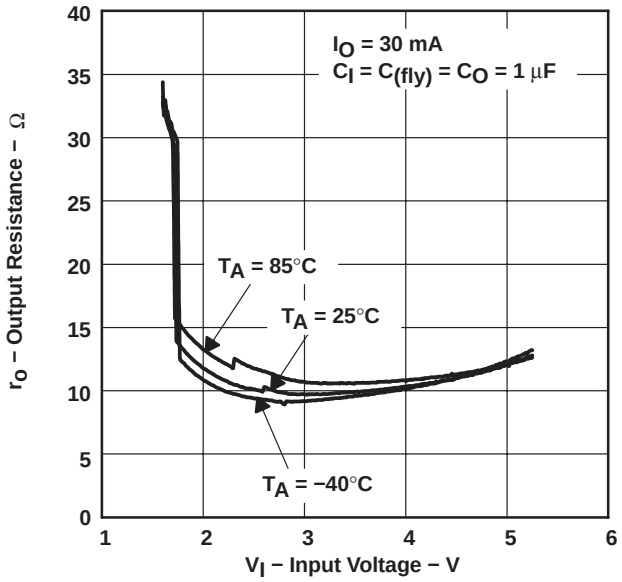

Figure 8

TPS60401
OUTPUT RESISTANCE
vs
INPUT VOLTAGE

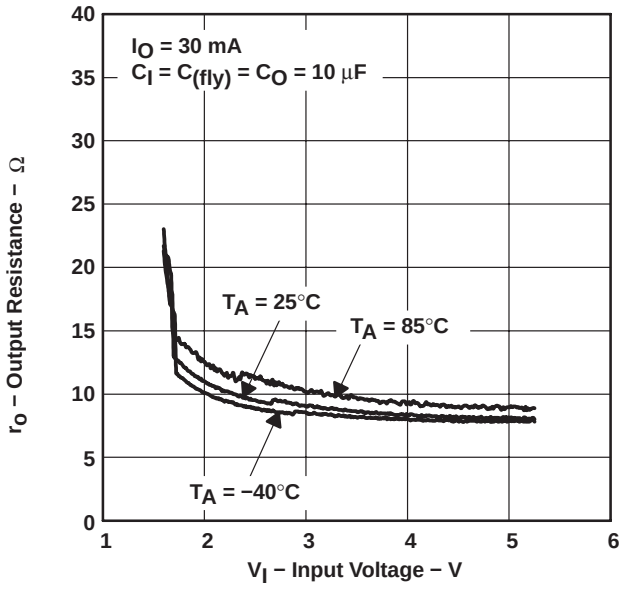

Figure 9

TPS60402
OUTPUT RESISTANCE
vs
INPUT VOLTAGE

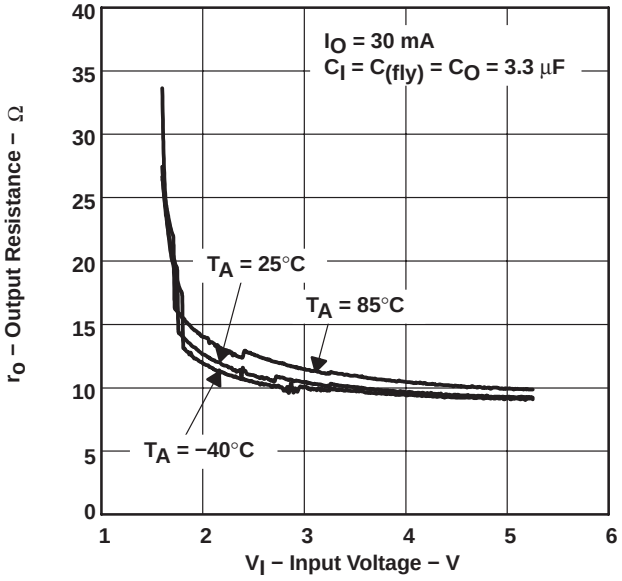

Figure 10

TPS60403
OUTPUT RESISTANCE
vs
INPUT VOLTAGE

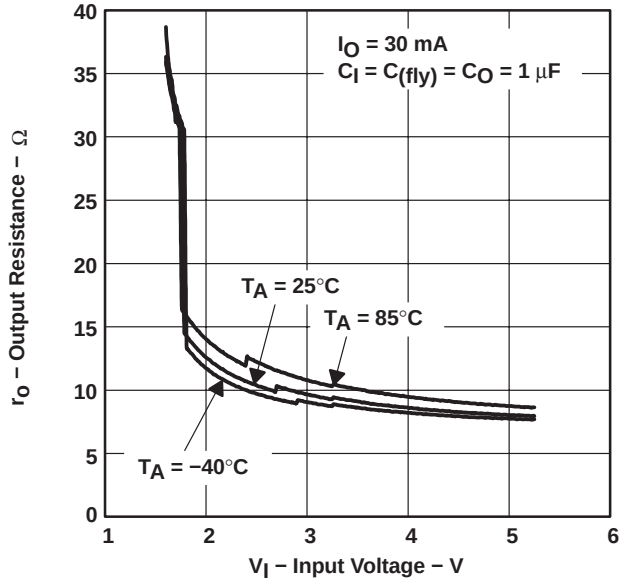

Figure 11

TYPICAL CHARACTERISTICS

TPS60400
OUTPUT VOLTAGE
vs
OUTPUT CURRENT

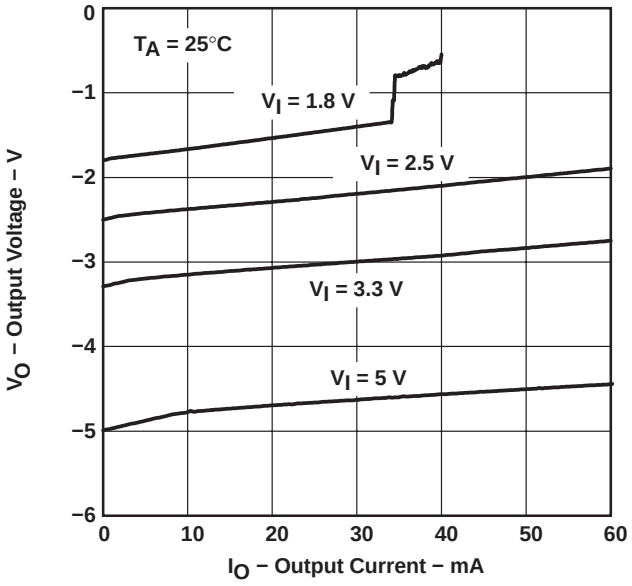

Figure 12

TPS60401
OUTPUT VOLTAGE
vs
OUTPUT CURRENT

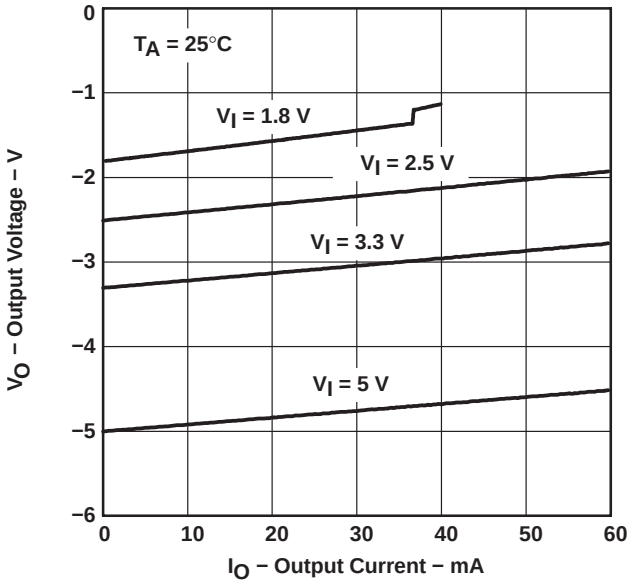

Figure 13

TPS60402
OUTPUT VOLTAGE
vs
OUTPUT CURRENT

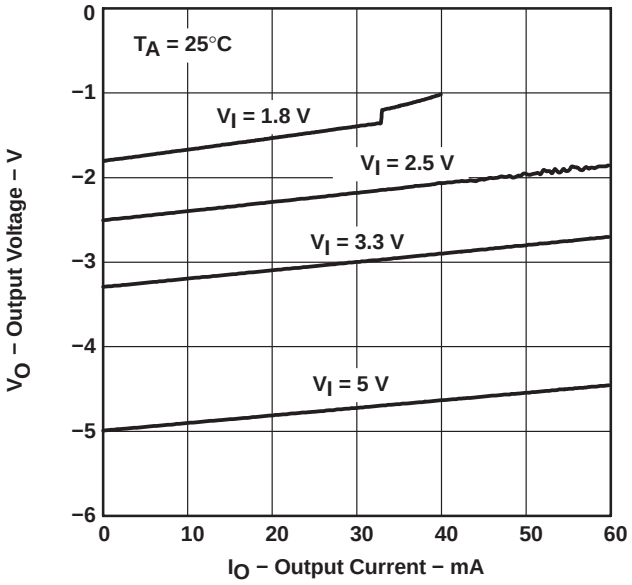

Figure 14

TPS60403
OUTPUT VOLTAGE
vs
OUTPUT CURRENT

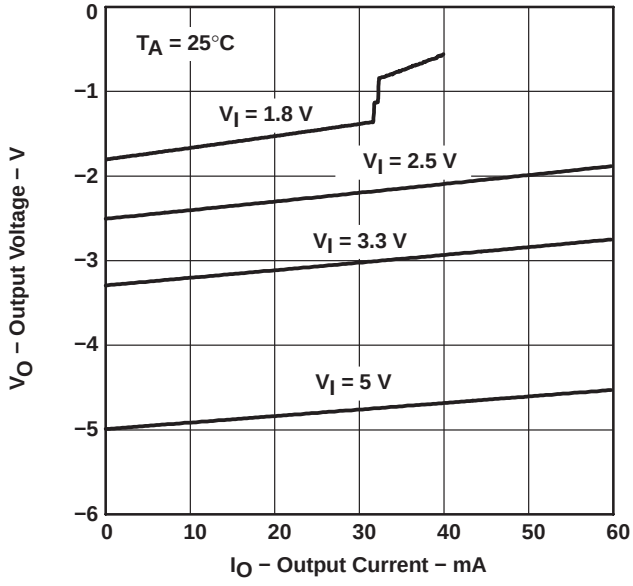

Figure 15

TYPICAL CHARACTERISTICS

TPS60400
OSCILLATOR FREQUENCY
vs
FREE-AIR TEMPERATURE

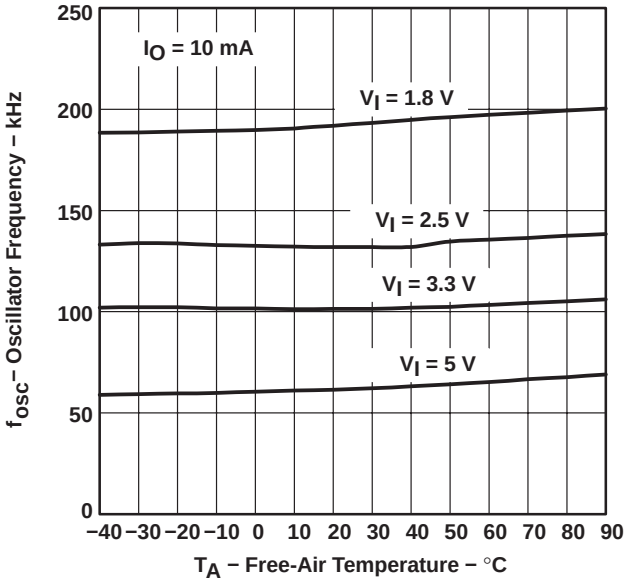

Figure 16

TPS60401
OSCILLATOR FREQUENCY
vs
FREE-AIR TEMPERATURE

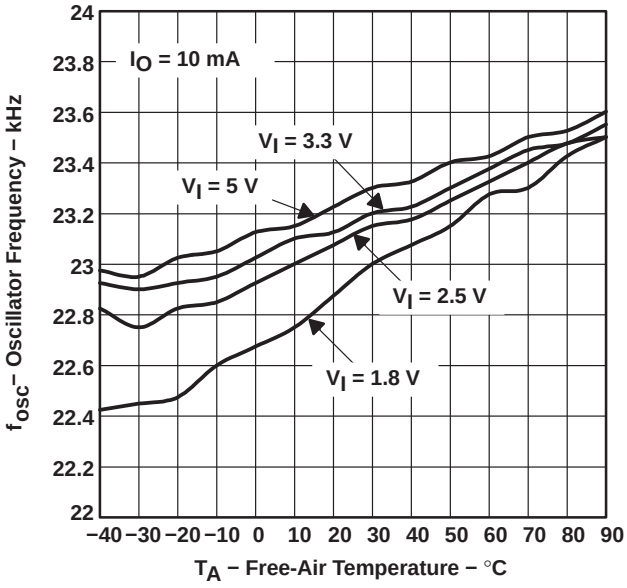

Figure 17

TPS60402
OSCILLATOR FREQUENCY
vs
FREE-AIR TEMPERATURE

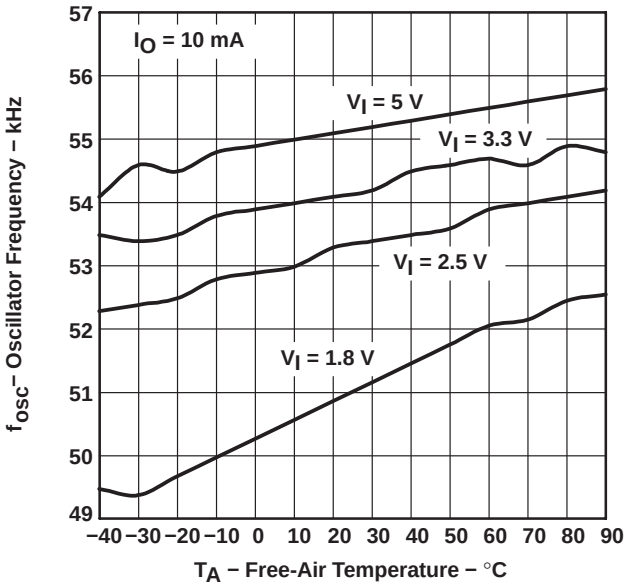

Figure 18

TPS60403
OSCILLATOR FREQUENCY
vs
FREE-AIR TEMPERATURE

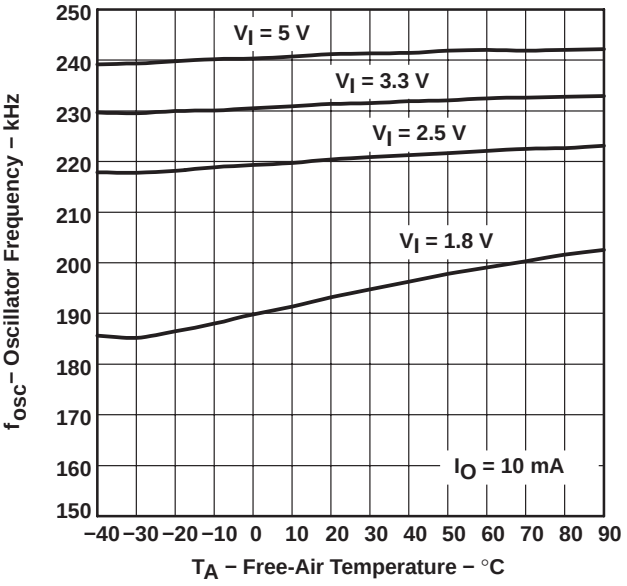

Figure 19

TYPICAL CHARACTERISTICS

TPS60400
OSCILLATOR FREQUENCY
vs
OUTPUT CURRENT

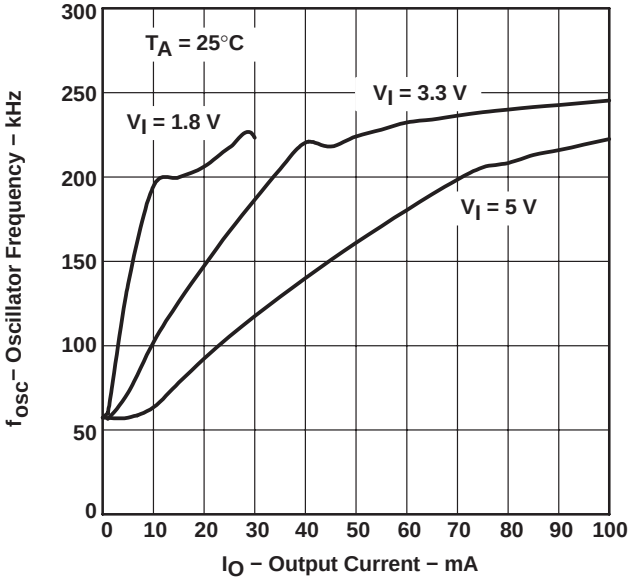

Figure 20

TPS60401, TPS60402
OUTPUT VOLTAGE
vs
TIME

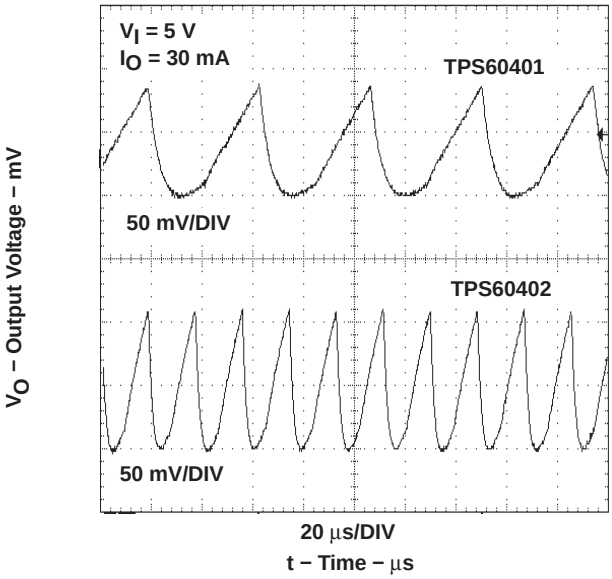

Figure 21

TPS60400, TPS60403
OUTPUT VOLTAGE
vs
TIME

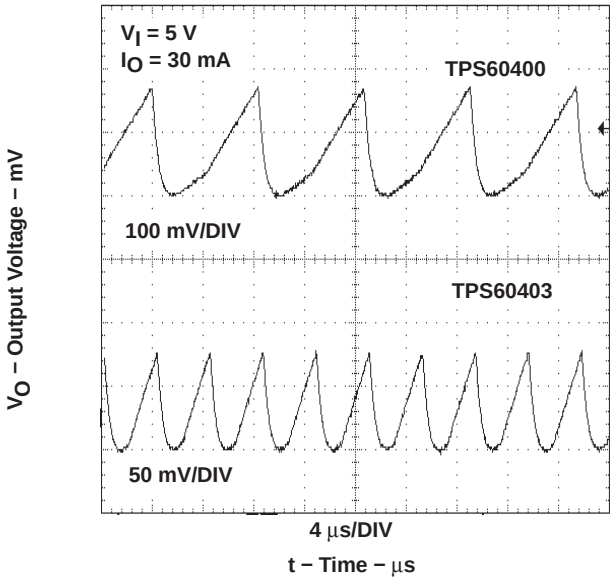

Figure 22

APPLICATION INFORMATION

voltage inverter

The most common application for these devices is a charge-pump voltage inverter (see Figure 23). This application requires only two external components; capacitors $C_{(fly)}$ and C_O, plus a bypass capacitor, if necessary. Refer to the capacitor selection section for suggested capacitor types.

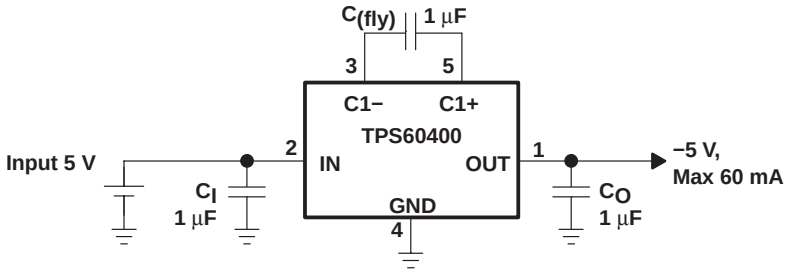

Figure 23. Typical Operating Circuit

For the maximum output current and best performance, three ceramic capacitors of 1 μF (TPS60400, TPS60403) are recommended. For lower currents or higher allowed output voltage ripple, other capacitors can also be used. It is recommended that the output capacitors has a minimum value of 1 μF. With flying capacitors lower than 1 μF, the maximum output power will decrease.

APPLICATION INFORMATION

RC-post filter

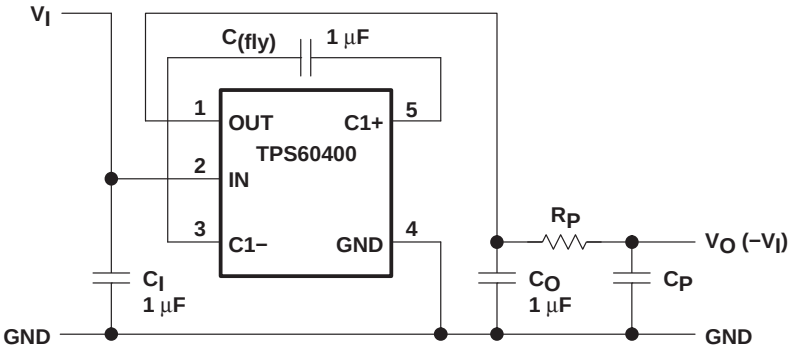

Figure 24. TPS60400 and TPS60401 With RC-Post Filter

An output filter can easily be formed with a resistor (R_P) and a capacitor (C_P). Cutoff frequency is given by:

$$f_c = \frac{1}{2\pi R_P C_P} \quad (1)$$

and ratio V_O/V_{OUT} is:

$$\left|\frac{V_O}{V_{OUT}}\right| = \frac{1}{\sqrt{1 + \left(2\pi f R_P C_P\right)^2}} \quad (2)$$

with R_P = 50 Ω, C_P = 0.1 µF and f = 250 kHz: $\left|\frac{V_O}{V_{OUT}}\right| = 0.125$

The formula refers only to the relation between output and input of the ac ripple voltages of the filter.

LC-post filter

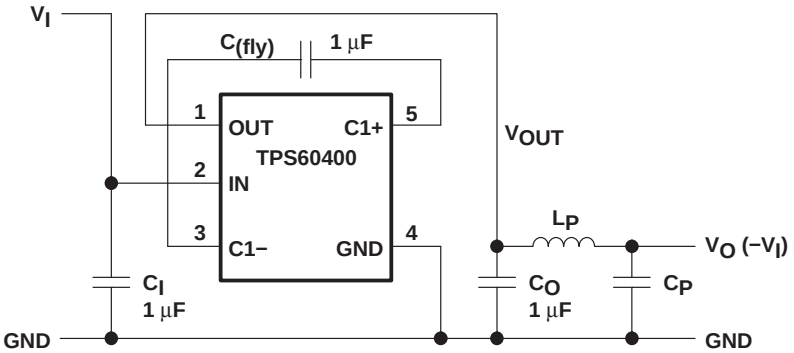

Figure 25. LC-Post Filter

Figure 25 shows a configuration with a LC-post filter to further reduce output ripple and noise.

APPLICATION INFORMATION

Table 4. Measurement Results on the TPS60400 (Typical)

V_I [V]	$I_{O(2)}$ [mA]	C_I [µF]	$C_{(fly)}$ [µF]	C_O [µF]	L_P [µH]	C_P [µF]	BW = 500 MHz V_{POUT} V_{P-P}[mV]	BW = 20 MHz V_{POUT} V_{P-P}[mV]	V_{POUT} VACeff [mV]
		CERAMIC	CERAMIC	CERAMIC		CERAMIC			
5	60	1	1	1			320	240	65
5	60	1	1	2.2			120	240	32
5	60	1	1	1		0.1 (X7R)	260	200	58
5	60	1	1	1	0.1	0.1 (X7R)	220	200	60
5	60	1	1	2.2	0.1	0.1 (X7R)	120	100	30
5	60	1	1	10	0.1	0.1 (X7R)	50	28	8

rail splitter

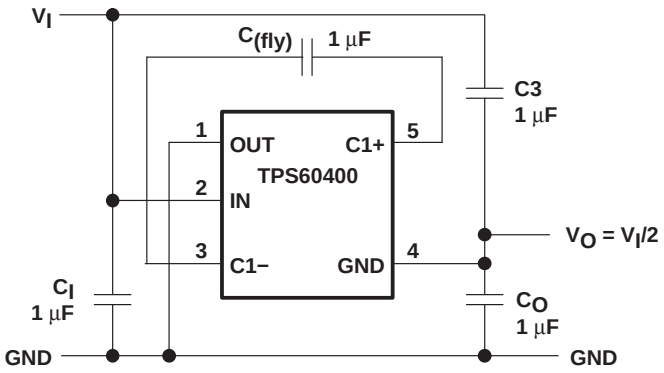

Figure 26. TPS60400 as a High-Efficiency Rail Splitter

A switched-capacitor voltage inverter can be configured as a high efficiency rail-splitter. This circuit provides a bipolar power supply that is useful in battery powered systems to supply dual-rail ICs, like operational amplifiers. Moreover, the SOT23-5 package and associated components require very little board space.

After power is applied, the flying capacitor ($C_{(fly)}$) connects alternately across the output capacitors C_3 and C_O. This equalizes the voltage on those capacitors and draws current from V_I to V_O as required to maintain the output at 1/2 V_I.

The maximum input voltage between V_I and GND in the schematic (or between IN and OUT at the device itself) must not exceed 6.5 V.

APPLICATION INFORMATION

combined doubler/inverter

In the circuit of Figure 27, capacitors C_I, $C_{(fly)}$, and C_O form the inverter, while C1 and C2 form the doubler. C1 and $C_{(fly)}$ are the flying capacitors; C_O and C2 are the output capacitors. Because both the inverter and doubler use part of the charge-pump circuit, loading either output causes both outputs to decline toward GND. Make sure the sum of the currents drawn from the two outputs does not exceed 60 mA. The maximum output current at $V_{(pos)}$ must not exceed 30 mA. If the negative output is loaded, this current must be further reduced.

$$I_I \approx -I_O + 2 \times I_{O(POS)}$$

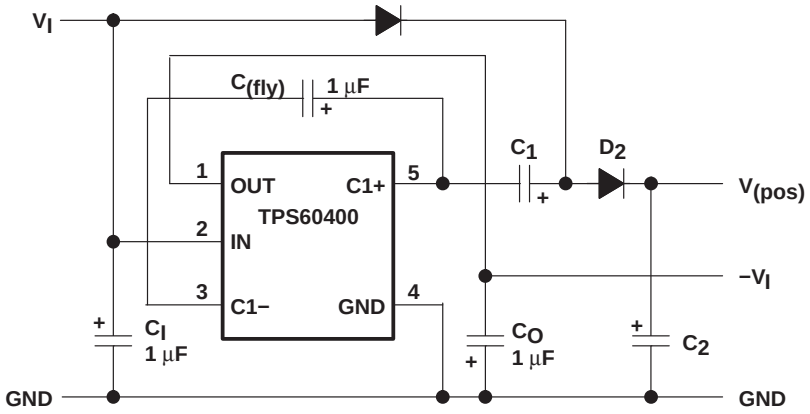

Figure 27. TPS60400 as Doubler/Inverter

cascading devices

Two devices can be cascaded to produce an even larger negative voltage (see Figure 28). The unloaded output voltage is normally $-2 \times V_I$, but this is reduced slightly by the output resistance of the first device multiplied by the quiescent current of the second. When cascading more than two devices, the output resistance rises dramatically.

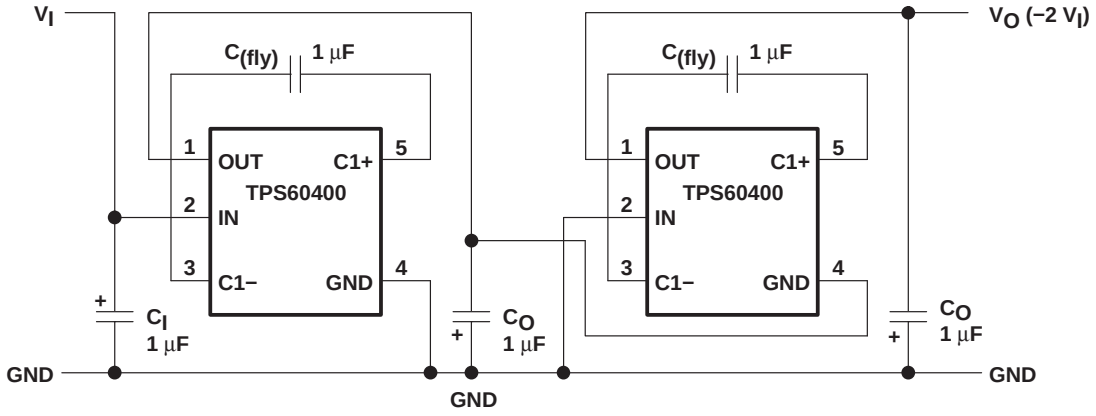

Figure 28. Doubling Inverter

APPLICATION INFORMATION

paralleling devices

Paralleling multiple TPS6040xs reduces the output resistance. Each device requires its own flying capacitor ($C_{(fly)}$), but the output capacitor (C_O) serves all devices (see Figure 29). Increase C_O's value by a factor of n, where n is the number of parallel devices. Equation 1 on page 3 shows the equation for calculating output resistance.

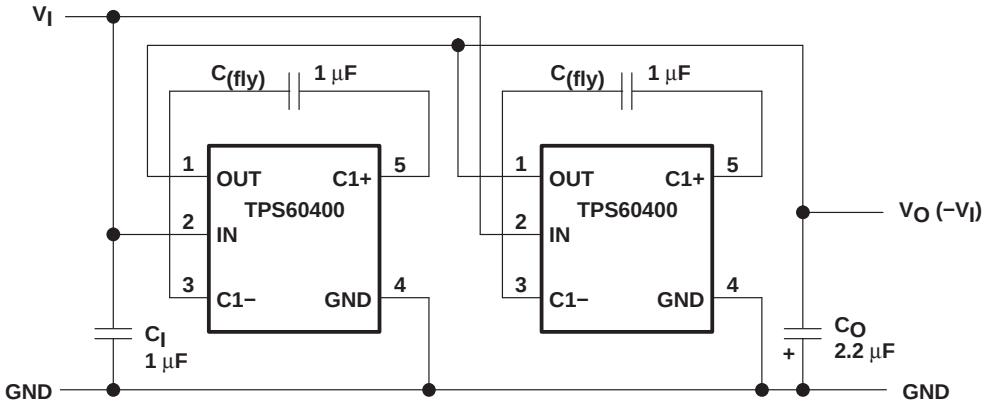

Figure 29. Paralleling Devices

active-Schottky diode

For a short period of time, when the input voltage is applied, but the inverter is not yet working, the output capacitor is charged positive by the load. To prevent the output being pulled above GND, a Schottky diode must be added in parallel to the output. The function of this diode is integrated into the TPS6040x devices, which gives a defined startup performance and saves board space.

A current sink and a diode in series can approximate the behavior of a typical, modern operational amplifier. Figure 30 shows the current into this typical load at a given voltage. The TPS6040x devices are optimized to start into these loads.

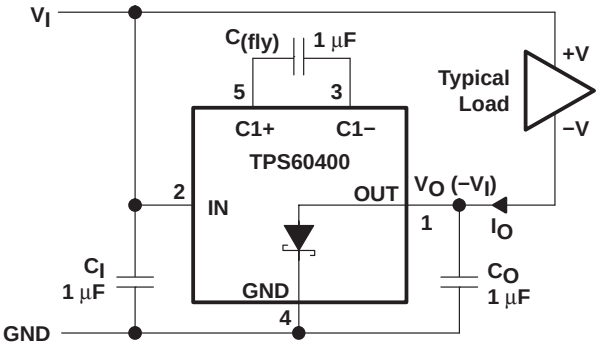

Figure 30. Typical Load

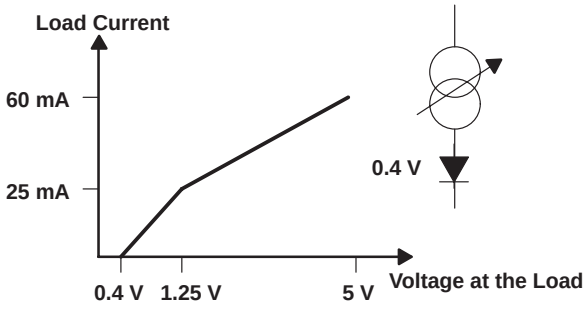

Figure 31. Maximum Start-Up Current

APPLICATION INFORMATION

shutting down the TPS6040x

If shutdown is necessary, use the circuit in Figure 32. The output resistance of the TPS6040x will typically be 15 Ω plus two times the output resistance of the buffer.

Connecting multiple buffers in parallel can reduce the output resistance of the buffer driving the IN pin.

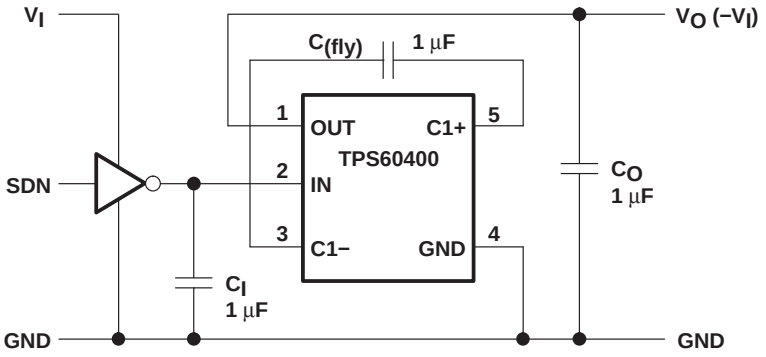

Figure 32. Shutdown Control

GaAs supply

A solution for a –2.7-V/3-mA GaAs bias supply is proposed in Figure 33. The input voltage of 3.3 V is first inverted with a TPS60403 and stabilized using a TLV431 low-voltage shunt regulator. Resistor R_P with capacitor C_P is used for filtering the output voltage.

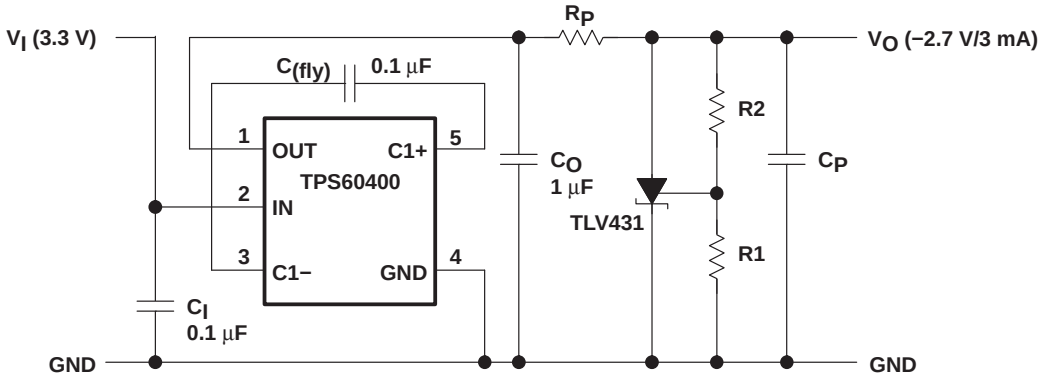

Figure 33. GaAs Supply

$$V_O = -\left(1 + \frac{R1}{R2}\right) \times V_{ref} - R1 \times I_{I(ref)}$$

A 0.1-μF capacitor was selected for $C_{(fly)}$. By this, the output resistance of the inverter is about 52 Ω.

APPLICATION INFORMATION

GaAs supply (continued)

R_{PMAX} can be calculated using the following equation:

$$R_{PMAX} = \left(\frac{V_{CO} - V_O}{I_O} - R_O \right)$$

With: V_{CO} = −3.3 V; V_O = −2.7 V; I_O = −3 mA

R_{PMAX} = 200 Ω − 52 Ω = 148 Ω

A 100-Ω resistor was selected for R_P.

The reference voltage across R2 is 1.24 V typical. With 5-µA current for the voltage divider, R2 gets:

$$R2 = \frac{1.24\ V}{5\ \mu A} \approx 250\ k\Omega$$

$$R1 = \frac{2.7 - 1.24\ V}{5\ \mu A} \approx 300\ k\Omega$$

With C_P = 1 µF the ratio V_O/V_I of the RC post filter is:

$$\left| \frac{V_O}{V_I} \right| = \frac{1}{\sqrt{1 + (2\pi 125000Hz \times 100\Omega \times 1\ \mu F)^2}} \approx 0.01$$

step-down charge pump

By exchanging GND with OUT (connecting the GND pin with OUT and the OUT pin with GND), a step-down charge pump can easily be formed. In the first cycle S1 and S3 are closed, and $C_{(fly)}$ with C_O in series are charged. Assuming the same capacitance, the voltage across $C_{(fly)}$ and C_O is split equally between the capacitors. In the second cycle, S2 and S4 close and both capacitors with $V_I/2$ across are connected in parallel.

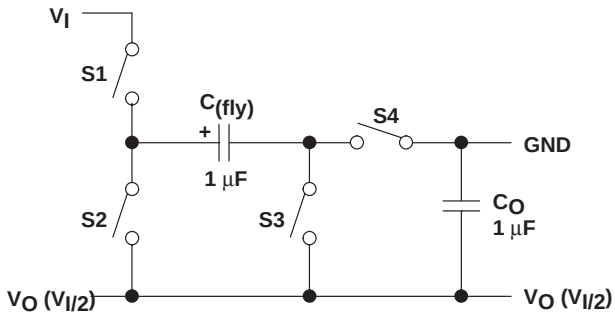

Figure 34. Step-Down Principle

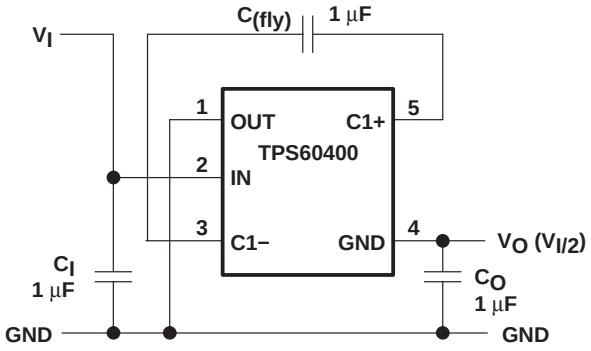

Figure 35. Step-Down Charge Pump Connection

The maximum input voltage between V_I and GND in the schematic (or between IN and OUT at the device itself) must not exceed 6.5 V. For input voltages in the range of 6.5 V to 11 V, an additional Zener-diode is recommended (see Figure 36).

APPLICATION INFORMATION

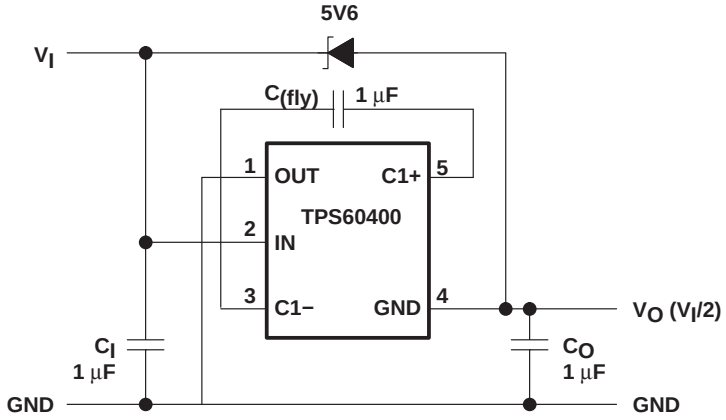

Figure 36.

power dissipation

As given in the data sheet, the thermal resistance of the unsoldered package is $R_{\theta JA}$ = 347°C/W. Soldered on the EVM, a typical thermal resistance of $R_{\theta JA(EVM)}$ = 180°C/W was measured.

The terminal resistance can be calculated using the following equation:

$$R_{\theta JA} = \frac{T_J - T_A}{P_D}$$

Where:

T_J is the junction temperature.
T_A is the ambient temperature.
P_D is the power that needs to be dissipated by the device.

$$R_{\theta JA} = \frac{T_J - T_A}{P_D}$$

The maximum power dissipation can be calculated using the following equation:

$$P_D = V_I \times I_I - V_O \times I_O = V_{I(max)} \times (I_O + I_{(SUPPLY)}) - V_O \times I_O$$

The maximum power dissipation happens with maximum input voltage and maximum output current.

At maximum load the supply current is 0.7 mA maximum.

$$P_D = 5\ V \times (60\ mA + 0.7\ mA) - 4.4\ V \times 60\ mA = 40\ mW$$

With this maximum rating and the thermal resistance of the device on the EVM, the maximum temperature rise above ambient temperature can be calculated using the following equation:

$$\Delta T_J = R_{\theta JA} \times P_D = 180°C/W \times 40\ mW = 7.2°C$$

This means that the internal dissipation increases T_J by <10°C.

The junction temperature of the device shall not exceed 125°C.

This means the IC can easily be used at ambient temperatures up to:

$$T_A = T_{J(max)} - \Delta T_J = 125°C/W - 10°C = 115°C$$

APPLICATION INFORMATION

layout and board space

All capacitors should be soldered as close as possible to the IC. A PCB layout proposal for a single-layer board is shown in Figure 37. Care has been taken to connect all capacitors as close as possible to the circuit to achieve optimized output voltage ripple performance.

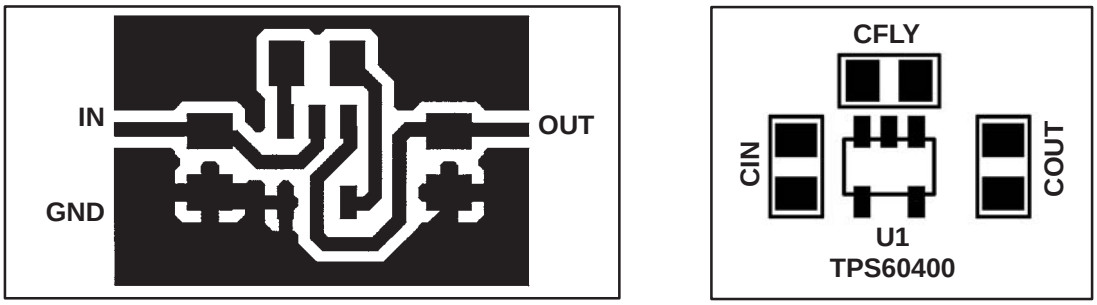

Figure 37. Recommended PCB Layout for TPS6040x (top layer)

device family products

Other inverting dc-dc converters from Texas Instruments are listed in Table 5.

Table 5. Product Identification

PART NUMBER	DESCRIPTION
TPS6735	Fixed negative 5-V, 200-mA inverting dc-dc converter
TPS6755	Adjustable 1-W inverting dc-dc converter

PACKAGING INFORMATION

Orderable Device	Status (1)	Package Type	Package Drawing	Pins	Package Qty	Eco Plan (2)	Lead/Ball Finish	MSL Peak Temp (3)
TPS60400DBVR	ACTIVE	SOT-23	DBV	5	3000	Green (RoHS & no Sb/Br)	CU NIPDAU	Level-1-260C-UNLIM
TPS60400DBVRG4	ACTIVE	SOT-23	DBV	5	3000	Green (RoHS & no Sb/Br)	CU NIPDAU	Level-1-260C-UNLIM
TPS60400DBVT	ACTIVE	SOT-23	DBV	5	250	Green (RoHS & no Sb/Br)	CU NIPDAU	Level-1-260C-UNLIM
TPS60400DBVTG4	ACTIVE	SOT-23	DBV	5	250	Green (RoHS & no Sb/Br)	CU NIPDAU	Level-1-260C-UNLIM
TPS60401DBVR	ACTIVE	SOT-23	DBV	5	3000	Green (RoHS & no Sb/Br)	CU NIPDAU	Level-1-260C-UNLIM
TPS60401DBVRG4	ACTIVE	SOT-23	DBV	5	3000	Green (RoHS & no Sb/Br)	CU NIPDAU	Level-1-260C-UNLIM
TPS60401DBVT	ACTIVE	SOT-23	DBV	5	250	Green (RoHS & no Sb/Br)	CU NIPDAU	Level-1-260C-UNLIM
TPS60401DBVTG4	ACTIVE	SOT-23	DBV	5	250	Green (RoHS & no Sb/Br)	CU NIPDAU	Level-1-260C-UNLIM
TPS60402DBVR	ACTIVE	SOT-23	DBV	5	3000	Green (RoHS & no Sb/Br)	CU NIPDAU	Level-1-260C-UNLIM
TPS60402DBVRG4	ACTIVE	SOT-23	DBV	5	3000	Green (RoHS & no Sb/Br)	CU NIPDAU	Level-1-260C-UNLIM
TPS60402DBVT	ACTIVE	SOT-23	DBV	5	250	Green (RoHS & no Sb/Br)	CU NIPDAU	Level-1-260C-UNLIM
TPS60402DBVTG4	ACTIVE	SOT-23	DBV	5	250	Green (RoHS & no Sb/Br)	CU NIPDAU	Level-1-260C-UNLIM
TPS60403DBVR	ACTIVE	SOT-23	DBV	5	3000	Green (RoHS & no Sb/Br)	CU NIPDAU	Level-1-260C-UNLIM
TPS60403DBVRG4	ACTIVE	SOT-23	DBV	5	3000	Green (RoHS & no Sb/Br)	CU NIPDAU	Level-1-260C-UNLIM
TPS60403DBVT	ACTIVE	SOT-23	DBV	5	250	Green (RoHS & no Sb/Br)	CU NIPDAU	Level-1-260C-UNLIM
TPS60403DBVTG4	ACTIVE	SOT-23	DBV	5	250	Green (RoHS & no Sb/Br)	CU NIPDAU	Level-1-260C-UNLIM

(1) The marketing status values are defined as follows:
ACTIVE: Product device recommended for new designs.
LIFEBUY: TI has announced that the device will be discontinued, and a lifetime-buy period is in effect.
NRND: Not recommended for new designs. Device is in production to support existing customers, but TI does not recommend using this part in a new design.
PREVIEW: Device has been announced but is not in production. Samples may or may not be available.
OBSOLETE: TI has discontinued the production of the device.

(2) Eco Plan - The planned eco-friendly classification: Pb-Free (RoHS), Pb-Free (RoHS Exempt), or Green (RoHS & no Sb/Br) - please check http://www.ti.com/productcontent for the latest availability information and additional product content details.
TBD: The Pb-Free/Green conversion plan has not been defined.
Pb-Free (RoHS): TI's terms "Lead-Free" or "Pb-Free" mean semiconductor products that are compatible with the current RoHS requirements for all 6 substances, including the requirement that lead not exceed 0.1% by weight in homogeneous materials. Where designed to be soldered at high temperatures, TI Pb-Free products are suitable for use in specified lead-free processes.
Pb-Free (RoHS Exempt): This component has a RoHS exemption for either 1) lead-based flip-chip solder bumps used between the die and package, or 2) lead-based die adhesive used between the die and leadframe. The component is otherwise considered Pb-Free (RoHS compatible) as defined above.
Green (RoHS & no Sb/Br): TI defines "Green" to mean Pb-Free (RoHS compatible), and free of Bromine (Br) and Antimony (Sb) based flame retardants (Br or Sb do not exceed 0.1% by weight in homogeneous material)

(3) MSL, Peak Temp. -- The Moisture Sensitivity Level rating according to the JEDEC industry standard classifications, and peak solder temperature.

Important Information and Disclaimer: The information provided on this page represents TI's knowledge and belief as of the date that it is provided. TI bases its knowledge and belief on information provided by third parties, and makes no representation or warranty as to the accuracy of such information. Efforts are underway to better integrate information from third parties. TI has taken and continues to take reasonable steps to provide representative and accurate information but may not have conducted destructive testing or chemical analysis on incoming materials and chemicals. TI and TI suppliers consider certain information to be proprietary, and thus CAS numbers and other limited information may not be available for release.

In no event shall TI's liability arising out of such information exceed the total purchase price of the TI part(s) at issue in this document sold by TI to Customer on an annual basis.

OTHER QUALIFIED VERSIONS OF TPS60400, TPS60401, TPS60402, TPS60403 :

- Automotive: TPS60400-Q1, TPS60401-Q1, TPS60402-Q1, TPS60403-Q1

NOTE: Qualified Version Definitions:

- Automotive - Q100 devices qualified for high-reliability automotive applications targeting zero defects

TAPE AND REEL INFORMATION

REEL DIMENSIONS

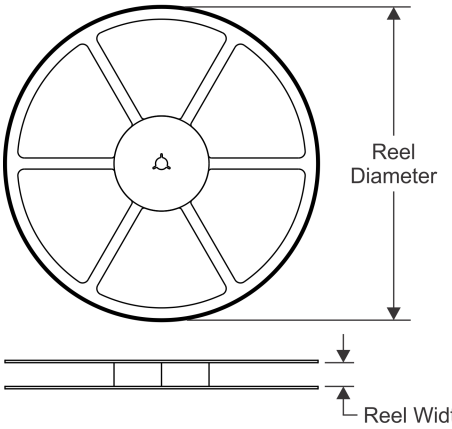

TAPE DIMENSIONS

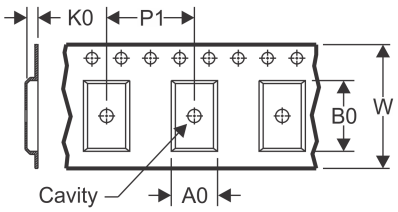

A0	Dimension designed to accommodate the component width
B0	Dimension designed to accommodate the component length
K0	Dimension designed to accommodate the component thickness
W	Overall width of the carrier tape
P1	Pitch between successive cavity centers

QUADRANT ASSIGNMENTS FOR PIN 1 ORIENTATION IN TAPE

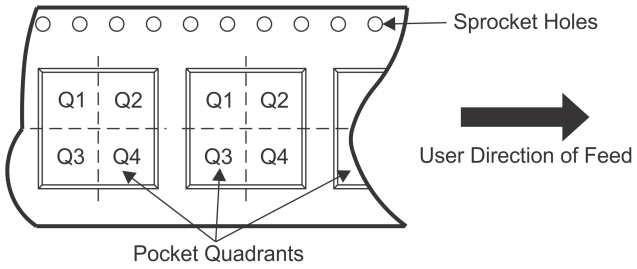

*All dimensions are nominal

Device	Package Type	Package Drawing	Pins	SPQ	Reel Diameter (mm)	Reel Width W1 (mm)	A0 (mm)	B0 (mm)	K0 (mm)	P1 (mm)	W (mm)	Pin1 Quadrant
TPS60400DBVR	SOT-23	DBV	5	3000	180.0	9.0	3.15	3.2	1.4	4.0	8.0	Q3
TPS60400DBVR	SOT-23	DBV	5	3000	178.0	9.0	3.23	3.17	1.37	4.0	8.0	Q3
TPS60400DBVT	SOT-23	DBV	5	250	180.0	9.0	3.15	3.2	1.4	4.0	8.0	Q3
TPS60400DBVT	SOT-23	DBV	5	250	178.0	9.0	3.23	3.17	1.37	4.0	8.0	Q3
TPS60401DBVR	SOT-23	DBV	5	3000	178.0	9.0	3.23	3.17	1.37	4.0	8.0	Q3
TPS60401DBVR	SOT-23	DBV	5	3000	180.0	9.0	3.15	3.2	1.4	4.0	8.0	Q3
TPS60401DBVT	SOT-23	DBV	5	250	180.0	9.0	3.15	3.2	1.4	4.0	8.0	Q3
TPS60401DBVT	SOT-23	DBV	5	250	178.0	9.0	3.23	3.17	1.37	4.0	8.0	Q3
TPS60402DBVR	SOT-23	DBV	5	3000	180.0	9.0	3.15	3.2	1.4	4.0	8.0	Q3
TPS60402DBVR	SOT-23	DBV	5	3000	178.0	9.0	3.23	3.17	1.37	4.0	8.0	Q3
TPS60402DBVT	SOT-23	DBV	5	250	178.0	9.0	3.23	3.17	1.37	4.0	8.0	Q3
TPS60402DBVT	SOT-23	DBV	5	250	180.0	9.0	3.15	3.2	1.4	4.0	8.0	Q3
TPS60403DBVR	SOT-23	DBV	5	3000	178.0	9.0	3.23	3.17	1.37	4.0	8.0	Q3
TPS60403DBVR	SOT-23	DBV	5	3000	180.0	9.0	3.15	3.2	1.4	4.0	8.0	Q3
TPS60403DBVT	SOT-23	DBV	5	250	180.0	9.0	3.15	3.2	1.4	4.0	8.0	Q3
TPS60403DBVT	SOT-23	DBV	5	250	178.0	9.0	3.23	3.17	1.37	4.0	8.0	Q3

TAPE AND REEL BOX DIMENSIONS

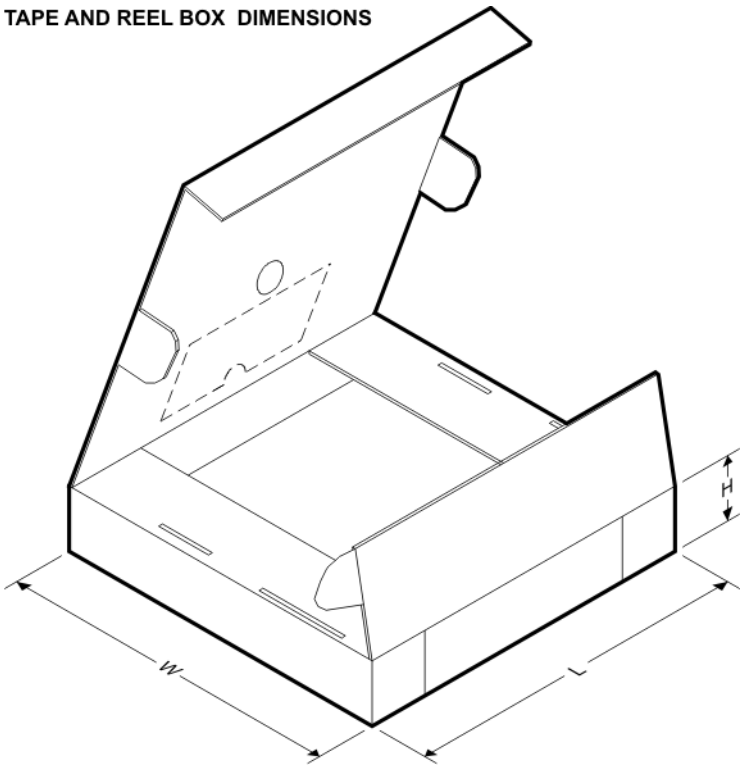

*All dimensions are nominal

Device	Package Type	Package Drawing	Pins	SPQ	Length (mm)	Width (mm)	Height (mm)
TPS60400DBVR	SOT-23	DBV	5	3000	182.0	182.0	20.0
TPS60400DBVR	SOT-23	DBV	5	3000	180.0	180.0	18.0
TPS60400DBVT	SOT-23	DBV	5	250	182.0	182.0	20.0
TPS60400DBVT	SOT-23	DBV	5	250	180.0	180.0	18.0
TPS60401DBVR	SOT-23	DBV	5	3000	180.0	180.0	18.0
TPS60401DBVR	SOT-23	DBV	5	3000	182.0	182.0	20.0
TPS60401DBVT	SOT-23	DBV	5	250	182.0	182.0	20.0
TPS60401DBVT	SOT-23	DBV	5	250	180.0	180.0	18.0
TPS60402DBVR	SOT-23	DBV	5	3000	182.0	182.0	20.0
TPS60402DBVR	SOT-23	DBV	5	3000	180.0	180.0	18.0
TPS60402DBVT	SOT-23	DBV	5	250	180.0	180.0	18.0
TPS60402DBVT	SOT-23	DBV	5	250	182.0	182.0	20.0
TPS60403DBVR	SOT-23	DBV	5	3000	180.0	180.0	18.0
TPS60403DBVR	SOT-23	DBV	5	3000	182.0	182.0	20.0
TPS60403DBVT	SOT-23	DBV	5	250	182.0	182.0	20.0
TPS60403DBVT	SOT-23	DBV	5	250	180.0	180.0	18.0

DBV (R–PDSO–G5) PLASTIC SMALL–OUTLINE PACKAGE

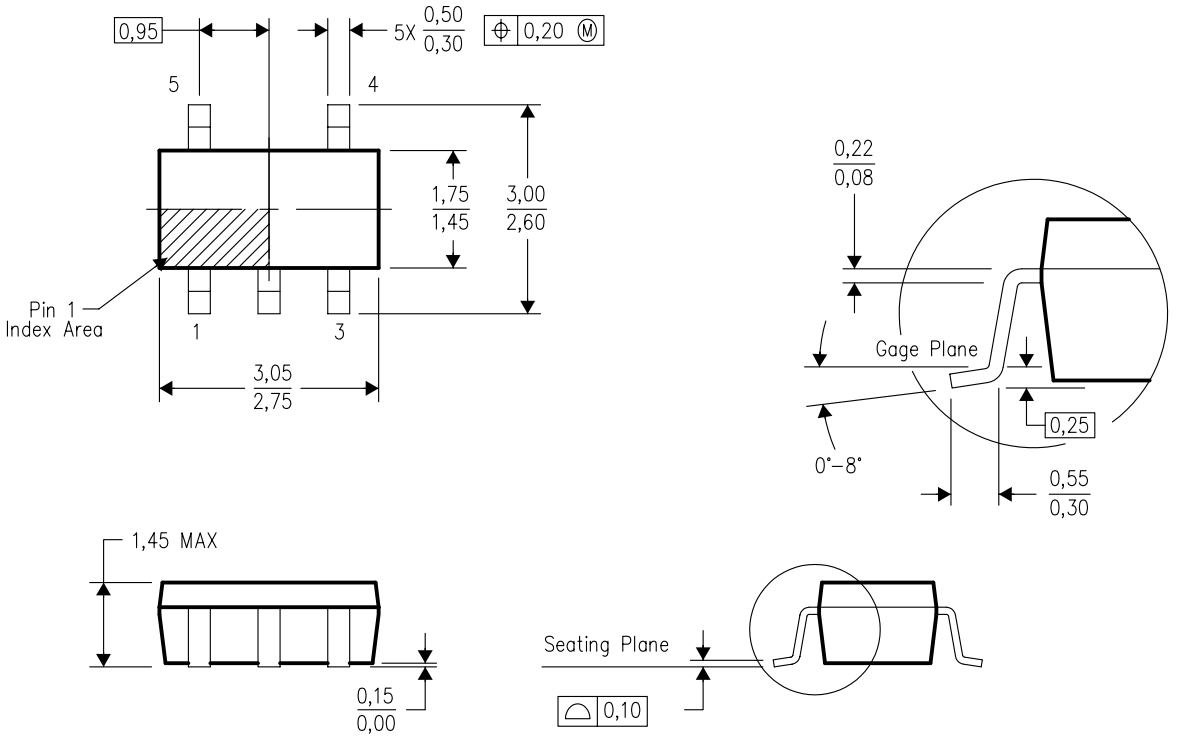

4073253–4/K 03/2006

NOTES:
A. All linear dimensions are in millimeters.
B. This drawing is subject to change without notice.
C. Body dimensions do not include mold flash or protrusion. Mold flash and protrusion shall not exceed 0.15 per side.
D. Falls within JEDEC MO–178 Variation AA.

DBV (R–PDSO–G5) PLASTIC SMALL OUTLINE

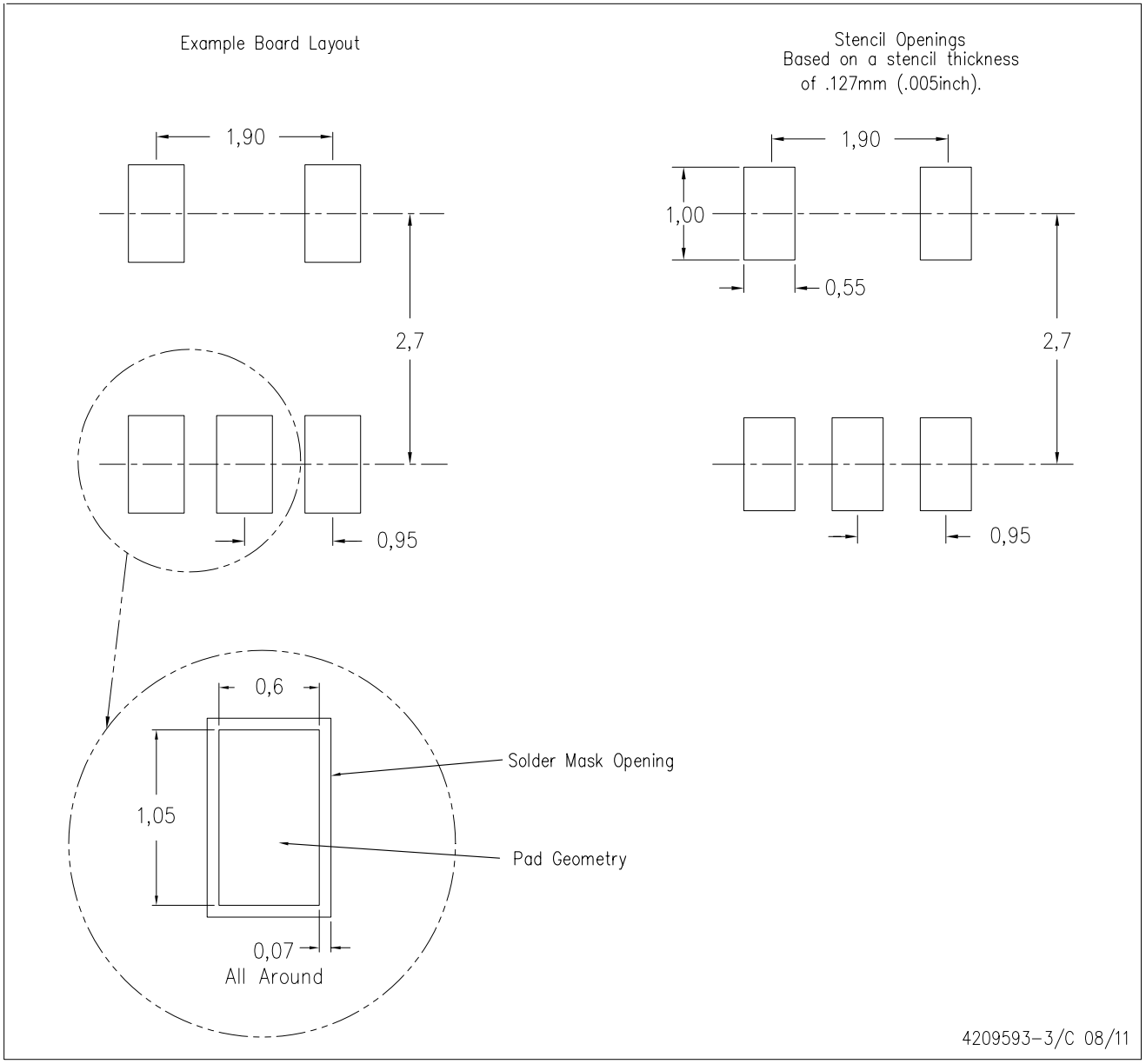

NOTES:
A. All linear dimensions are in millimeters.
B. This drawing is subject to change without notice.
C. Customers should place a note on the circuit board fabrication drawing not to alter the center solder mask defined pad.
D. Publication IPC–7351 is recommended for alternate designs.
E. Laser cutting apertures with trapezoidal walls and also rounding corners will offer better paste release. Customers should contact their board assembly site for stencil design recommendations. Example stencil design based on a 50% volumetric metal load solder paste. Refer to IPC–7525 for other stencil recommendations.