

PMST3906

40 V, 200 mA PNP switching transistor

Rev. 05 — 29 April 2009 Product data sheet

1. Product profile

1.1 General description

PNP switching transistor in a SOT323 (SC-70) very small Surface-Mounted Device (SMD) plastic package.

NPN complement: PMST3904.

1.2 Features

- Collector current: $I_C \leq -200$ mA
- Collector-emitter voltage: $V_{CEO} \leq -40$ V
- Very small SMD plastic package

1.3 Applications

- General amplification and switching

1.4 Quick reference data

Table 1. Quick reference data

Symbol	Parameter	Conditions	Min	Typ	Max	Unit
V_{CEO}	collector-emitter voltage	open base	-	-	–40	V
I_C	collector current		-	-	–200	mA

2. Pinning information

Table 2. Pinning

Pin	Description	Simplified outline	Graphic symbol
1	base	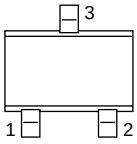	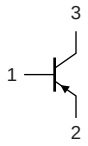
2	emitter		
3	collector		

sym013

NXP founded by Philips

3. Ordering information

Table 3. Ordering information

Type number	Package		
	Name	Description	Version
PMST3906	SC-70	plastic surface-mounted package; 3 leads	SOT323

4. Marking

Table 4. Marking codes

Type number	Marking code[1]
PMST3906	*2A

[1] * = -: made in Hong Kong
* = p: made in Hong Kong
* = t: made in Malaysia
* = W: made in China

5. Limiting values

Table 5. Limiting values

In accordance with the Absolute Maximum Rating System (IEC 60134).

Symbol	Parameter	Conditions		Min	Max	Unit
V_{CBO}	collector-base voltage	open emitter		-	–40	V
V_{CEO}	collector-emitter voltage	open base		-	–40	V
V_{EBO}	emitter-base voltage	open collector		-	–6	V
I_C	collector current			-	–200	mA
I_{CM}	peak collector current	single pulse; $t_p \leq 1$ ms		-	–200	mA
I_{BM}	peak base current	single pulse; $t_p \leq 1$ ms		-	–100	mA
P_{tot}	total power dissipation	$T_{amb} \leq 25$ °C	[1]	-	200	mW
T_j	junction temperature			-	150	°C
T_{amb}	ambient temperature			–65	+150	°C
T_{stg}	storage temperature			–65	+150	°C

[1] Device mounted on an FR4 Printed-Circuit Board (PCB), single-sided copper, tin-plated and standard footprint.

6. Thermal characteristics

Table 6. Thermal characteristics

Symbol	Parameter	Conditions		Min	Typ	Max	Unit
$R_{th(j-a)}$	thermal resistance from junction to ambient	in free air	[1]	-	-	625	K/W

[1] Device mounted on an FR4 PCB, single-sided copper, tin-plated and standard footprint.

© NXP B.V. 2009. All rights reserved.

7. Characteristics

Table 7. Characteristics

T_{amb} = 25 °C unless otherwise specified.

Symbol	Parameter	Conditions	Min	Typ	Max	Unit
I_{CBO}	collector-base cut-off current	I_E = 0 A; V_{CB} = –30 V	-	-	–50	nA
I_{EBO}	emitter-base cut-off current	I_C = 0 A; V_{EB} = –6 V	-	-	–50	nA
h_{FE}	DC current gain	V_{CE} = –1 V				
		I_C = –0.1 mA	60	-	-	
		I_C = –1 mA	80	-	-	
		I_C = –10 mA	100	-	300	
		I_C = –50 mA	60	-	-	
		I_C = –100 mA	30	-	-	
V_{CEsat}	collector-emitter saturation voltage	I_C = –10 mA; I_B = –1 mA	-	-	–250	mV
		I_C = –50 mA; I_B = –5 mA	-	-	–400	mV
V_{BEsat}	base-emitter saturation voltage	I_C = –10 mA; I_B = –1 mA	-	-	–850	mV
		I_C = –50 mA; I_B = –5 mA	-	-	–950	mV
t_d	delay time	I_C = –10 mA; I_{Bon} = –1 mA; I_{Boff} = 1 mA	-	-	35	ns
t_r	rise time		-	-	35	ns
t_{on}	turn-on time		-	-	70	ns
t_s	storage time		-	-	225	ns
t_f	fall time		-	-	75	ns
t_{off}	turn-off time		-	-	300	ns
C_c	collector capacitance	I_E = i_e = 0 A; V_{CB} = –5 V; f = 1 MHz	-	-	4.5	pF
C_e	emitter capacitance	I_C = i_c = 0 A; V_{EB} = –500 mV; f = 1 MHz	-	-	10	pF
f_T	transition frequency	I_C = –10 mA; V_{CE} = –20 V; f = 100 MHz	250	-	-	MHz
NF	noise figure	I_C = –100 µA; V_{CE} = –5 V; R_S = 1 kΩ; f = 10 Hz to 15.7 kHz	-	-	4	dB

© NXP B.V. 2009. All rights reserved.

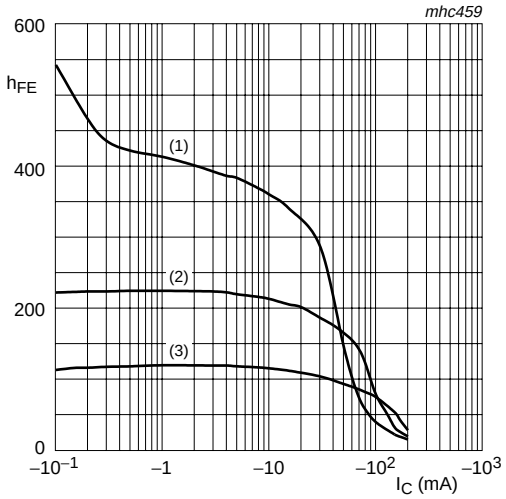

V_{CE} = −1 V

(1) T_{amb} = 150 °C

(2) T_{amb} = 25 °C

(3) T_{amb} = −55 °C

Fig 1. DC current gain as a function of collector current; typical values

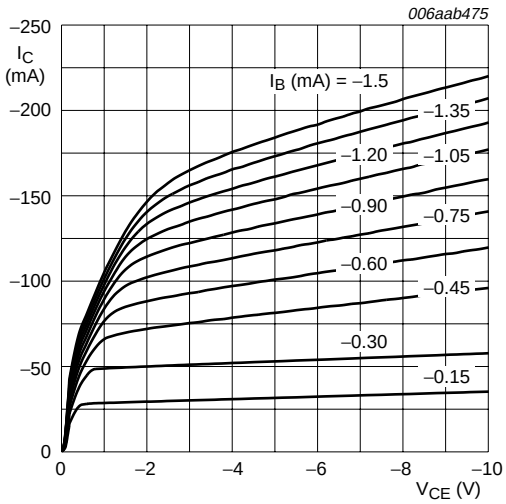

T_{amb} = 25 °C

Fig 2. Collector current as a function of collector-emitter voltage; typical values

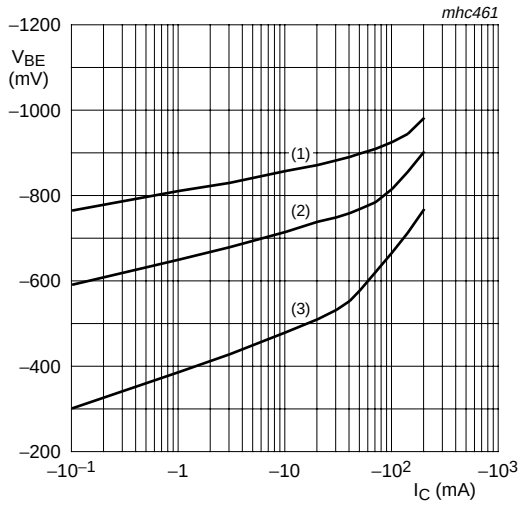

V_{CE} = −1 V

(1) T_{amb} = −55 °C

(2) T_{amb} = 25 °C

(3) T_{amb} = 150 °C

Fig 3. Base-emitter voltage as a function of collector current; typical values

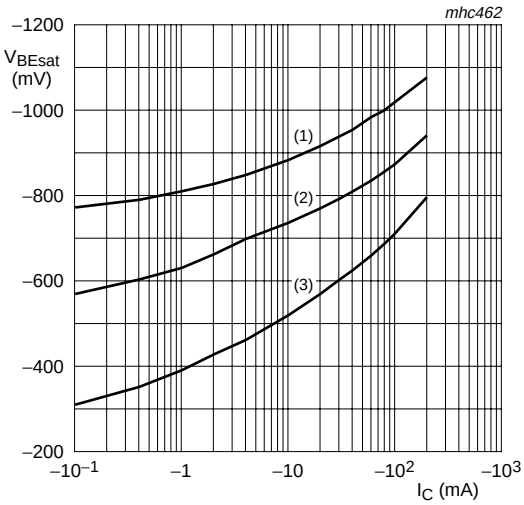

I_C/I_B = 10

(1) T_{amb} = −55 °C

(2) T_{amb} = 25 °C

(3) T_{amb} = 150 °C

Fig 4. Base-emitter saturation voltage as a function of collector current; typical values

© NXP B.V. 2009. All rights reserved.

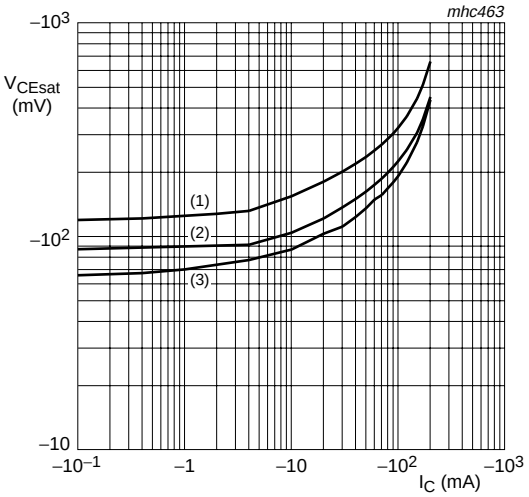

$I_C/I_B = 10$

(1) $T_{amb} = 150\ °C$

(2) $T_{amb} = 25\ °C$

(3) $T_{amb} = -55\ °C$

Fig 5. Collector-emitter saturation voltage as a function of collector current; typical values

8. Test information

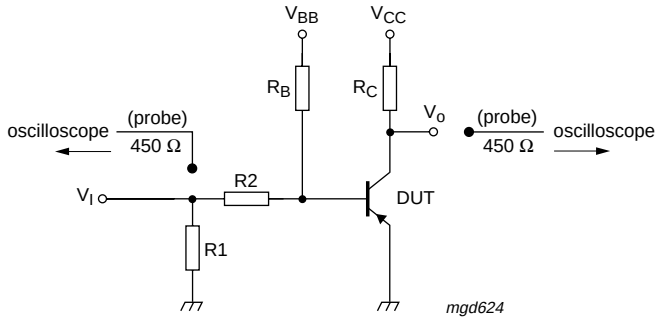

$V_I = 5\ V$; $t = 500\ \mu s$; $t_p = 10\ \mu s$; $t_r = t_f \leq 3\ ns$

$R1 = 56\ \Omega$; $R2 = 2.5\ k\Omega$; $R_B = 3.9\ k\Omega$; $R_C = 270\ \Omega$

$V_{BB} = 1.9\ V$; $V_{CC} = -3\ V$

Oscilloscope: input impedance $Z_I = 50\ \Omega$

Fig 6. Test circuit for switching times

© NXP B.V. 2009. All rights reserved.

9. Package outline

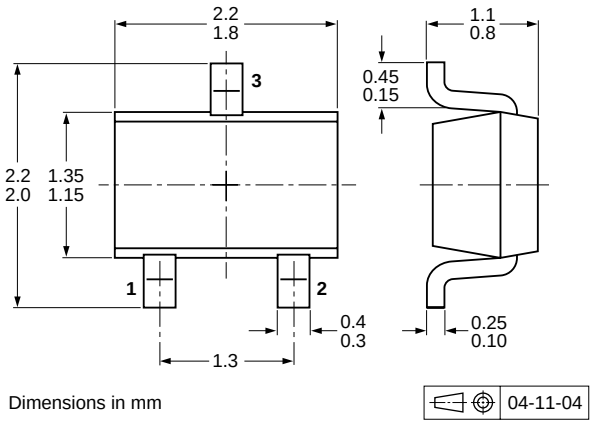

Fig 7. Package outline SOT323 (SC-70)

10. Packing information

Table 8. Packing methods

The indicated -xxx are the last three digits of the 12NC ordering code.[1]

Type number	Package	Description	Packing quantity	
			3000	10000
PMST3906	SOT323	4 mm pitch, 8 mm tape and reel	-115	-135

[1] For further information and the availability of packing methods, see Section 14.

© NXP B.V. 2009. All rights reserved.

11. Soldering

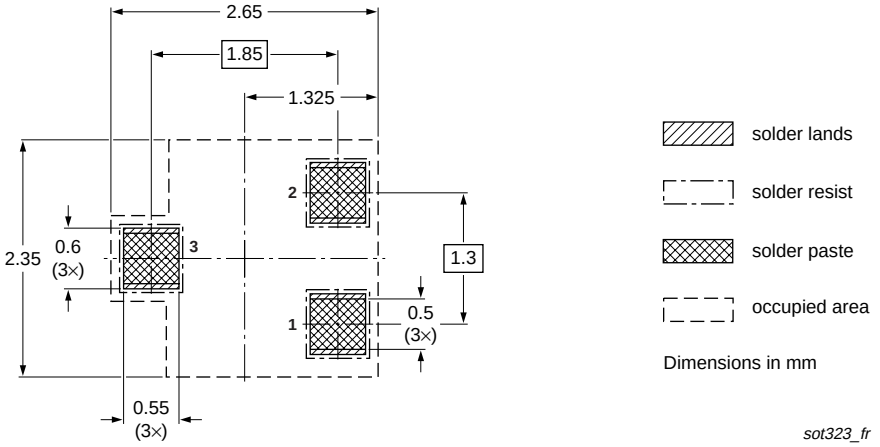

Fig 8. Reflow soldering footprint SOT323 (SC-70)

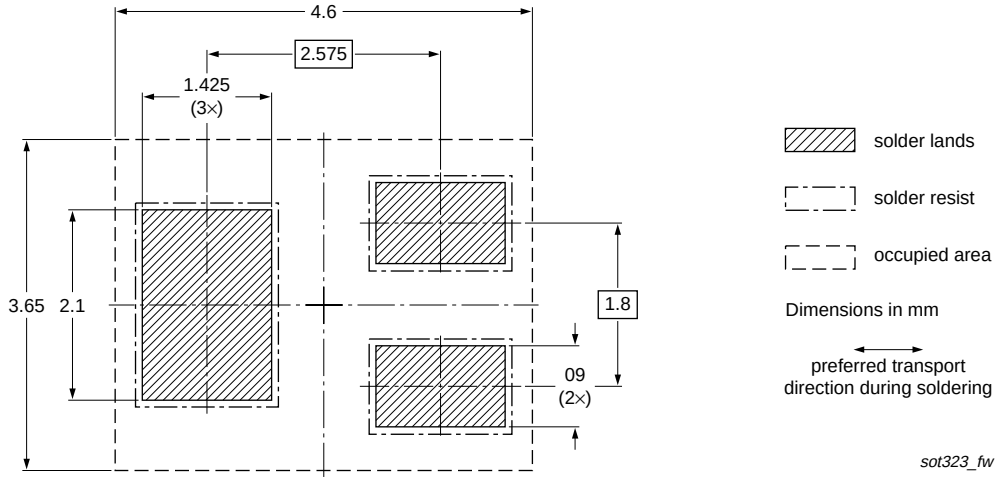

Fig 9. Wave soldering footprint SOT323 (SC-70)

© NXP B.V. 2009. All rights reserved.

12. Revision history

Table 9. Revision history

Document ID	Release date	Data sheet status	Change notice	Supersedes
PMST3906_5	20090429	Product data sheet	-	PMST3906_4
Modifications:	• The format of this data sheet has been redesigned to comply with the new identity guidelines of NXP Semiconductors. • Legal texts have been adapted to the new company name where appropriate. • Figure 2: updated • Figure 5: figure notes order amended • Section 10 “Packing information” added • Section 11 “Soldering”: added • Section 13 “Legal information”: updated			
PMST3906_4	20040121	Product specification	-	PMST3906_3
PMST3906_3	19990422	Product specification	-	PMST3906_CNV_2
PMST3906_CNV_2	19970527	Product specification	-	-

© NXP B.V. 2009. All rights reserved.

13. Legal information

13.1 Data sheet status

Document status[1][2]	Product status[3]	Definition
Objective [short] data sheet	Development	This document contains data from the objective specification for product development.
Preliminary [short] data sheet	Qualification	This document contains data from the preliminary specification.
Product [short] data sheet	Production	This document contains the product specification.

[1] Please consult the most recently issued document before initiating or completing a design.

[2] The term 'short data sheet' is explained in section "Definitions".

[3] The product status of device(s) described in this document may have changed since this document was published and may differ in case of multiple devices. The latest product status information is available on the Internet at URL http://www.nxp.com.

13.2 Definitions

Draft — The document is a draft version only. The content is still under internal review and subject to formal approval, which may result in modifications or additions. NXP Semiconductors does not give any representations or warranties as to the accuracy or completeness of information included herein and shall have no liability for the consequences of use of such information.

Short data sheet — A short data sheet is an extract from a full data sheet with the same product type number(s) and title. A short data sheet is intended for quick reference only and should not be relied upon to contain detailed and full information. For detailed and full information see the relevant full data sheet, which is available on request via the local NXP Semiconductors sales office. In case of any inconsistency or conflict with the short data sheet, the full data sheet shall prevail.

13.3 Disclaimers

General — Information in this document is believed to be accurate and reliable. However, NXP Semiconductors does not give any representations or warranties, expressed or implied, as to the accuracy or completeness of such information and shall have no liability for the consequences of use of such information.

Right to make changes — NXP Semiconductors reserves the right to make changes to information published in this document, including without limitation specifications and product descriptions, at any time and without notice. This document supersedes and replaces all information supplied prior to the publication hereof.

Suitability for use — NXP Semiconductors products are not designed, authorized or warranted to be suitable for use in medical, military, aircraft, space or life support equipment, nor in applications where failure or malfunction of an NXP Semiconductors product can reasonably be expected to result in personal injury, death or severe property or environmental damage. NXP Semiconductors accepts no liability for inclusion and/or use of NXP Semiconductors products in such equipment or applications and therefore such inclusion and/or use is at the customer's own risk.

Applications — Applications that are described herein for any of these products are for illustrative purposes only. NXP Semiconductors makes no representation or warranty that such applications will be suitable for the specified use without further testing or modification.

Limiting values — Stress above one or more limiting values (as defined in the Absolute Maximum Ratings System of IEC 60134) may cause permanent damage to the device. Limiting values are stress ratings only and operation of the device at these or any other conditions above those given in the Characteristics sections of this document is not implied. Exposure to limiting values for extended periods may affect device reliability.

Terms and conditions of sale — NXP Semiconductors products are sold subject to the general terms and conditions of commercial sale, as published at http://www.nxp.com/profile/terms, including those pertaining to warranty, intellectual property rights infringement and limitation of liability, unless explicitly otherwise agreed to in writing by NXP Semiconductors. In case of any inconsistency or conflict between information in this document and such terms and conditions, the latter will prevail.

No offer to sell or license — Nothing in this document may be interpreted or construed as an offer to sell products that is open for acceptance or the grant, conveyance or implication of any license under any copyrights, patents or other industrial or intellectual property rights.

Quick reference data — The Quick reference data is an extract of the product data given in the Limiting values and Characteristics sections of this document, and as such is not complete, exhaustive or legally binding.

Export control — This document as well as the item(s) described herein may be subject to export control regulations. Export might require a prior authorization from national authorities.

13.4 Trademarks

Notice: All referenced brands, product names, service names and trademarks are the property of their respective owners.

14. Contact information

For more information, please visit: **http://www.nxp.com**

For sales office addresses, please send an email to: **salesaddresses@nxp.com**

© NXP B.V. 2009. All rights reserved.